Walnut Cabinet • Lamp Table • Serving Tray
Spray Painted Finish • Molded Stub Tenon & Groove

Woodsmith®

Vol. 17 / No. 101

No. 101 October, 1995

Woodsmith®

Publisher Donald B. Peschke
Editor Terry J. Strohman
Assistant Editors Jon Garbison, Mark Williams
Senior Illustrators David Kreyling, Cinda Shambaugh, Dirk Ver Steeg
Illustrator Erich Lage

CREATIVE RESOURCES

Creative Director Ted Kralicek
Executive Editor Douglas L. Hicks
Project Design Dir. Ken Munkel
Sr. Project Designer Kent Welsh
Shop Manager Steve Curtis
Shop Craftsman Steve Johnson
Photographer Crayola England
Electronic Publishing Douglas M. Lidster
Electronic Graphics Chris Glowacki
Elec. Comunication Gordon C. Gaippe
Graphic Designer Cheryl L. Cynor

CIRCULATION

Subscription Managers: Sandy Baum, Troy J. Dowell, Paige Rogers • *Assistant Subscription Manager:* Julie Greenlee • *Newsstand Mgr:* Kent A. Buckton

CORPORATE SERVICES

Planning Director: Jon Macarthy • *Controller:* Robin Hutchinson • *Account:* Laura Thomas • *Bookkeeping:* Holly Lucas • *Production Dir.:* George Chmielarz • *Production Mgr.:* Carol Quijano • Pro. *Dev. Dir.:* Joyce Moore • *Network Administrator:* Nick Thielen • *Admin. Assistants:* Cheryl A. Scott, Julia Fish • *Receptionist:* Jeanne Johnson • *Building Maintenance:* Ken Griffith

WOODSMITH MAIL ORDER

Operations Director: Bob Baker • *Art Dir.:* Cindy Jackson • *Materials Mgr.:* Mark Mattiussi • *Customer service Mgr.:* Jennie Enos • *Warehouse Supervisor:* Nancy Johnson • *Buyer:* Linda Jones • *System Operator:* Tammy Aldini • *Team Leader:* Karla Cronin • *Tech. Supp:* Dave Stone • *Customer Service Reps.:* Jennifer Murphy, Joy Krause, Sara Kono, Anna Cox, Adam Best, Kristi Andrews • *Warehouse:* Gloria Sheehan, Chuck Carlson, Sylvia Carey, Larry Prine

WOODSMITH STORE

Manager: Dave Larson • *Assistant Manager:* Paul Schneider • *Sales Staff:* Wendell Stone, Pat Lowery • *Office Manager:* Vicki Edwards

Woodsmith® (ISSN 0164-4114) is published bimonthly (Feb., Apr., June, Aug., Oct., Dec.) by August Home Publishing., 2200 Grand, Des Moines, LA 50312.
Woodsmith® is a registered trademark of August Home Pub. Copyright© 1995 August Home Publishing. All rights reserved.
Subscriptions: Single copy: $3.95. One year subscription (6 issues), $19.95. Two years (12 issues), $35.95. (Canada/Foreign add $5 per year, U.S. funds.)
Second Class Postage Paid at Des Moines, LA and at additional offices.
Postmaster: Send change of address to *Woodsmith*, Box 10718, Des Moines, IA 50350.
Subscription Questions? Call **1-800-333-5075**, 8:00 am to 5:00 pm, Central Time, weekdays. Fax 515 - 283 - 0447
E-Mail. Prodigy: EDJE97A, CompuServe: 75330,2301, Internet 75330.2301 @compuserve.com., America Online: Donpeschke.
Printed in U.S.A

E D I T O R ' S C O L U M N

Sawdust

The way I look at it, woodworking is a series of connected steps that leads to a final goal. Usually, this goal is a functional, good-looking piece of furniture. But that's not what I find most rewarding. I enjoy the whole process — from planning to building and finishing the project.

PLANNING. After the design is complete, the first thing I do is figure out where I'm going to start and how I hope to end. So even before picking up a piece of wood, I sit down with the plans and work out the procedure. Actually, I build it several times in my head. The goal is to come up with the best way to build a project before I make my first cut.

For instance, I bet there are nearly a dozen different ways you could build the serving tray on page 24. Some are safer and more efficient than others. But I know from experience that working with small pieces can be tricky. And it can be tough to get them to fit together just right. So on the tray, I planned to use oversized blanks and test pieces. The blanks would keep my hands safe, and the test pieces would ensure accurate cuts.

BUILDING. But when the building begins, there's a subtle change in the process. Early on, I consult the plans carefully, making sure of each measurement. But it doesn't take long before I start consulting the project. Then instead of relying on precise numbers, I begin to get my measurements right from the project.

Of course, there's always a little room for error when I'm not working with "hard" measurements. And the difference between a good fit and a sloppy fit is probably only a few thousandths of an inch. So often, I **won't** try to cut a piece "dead on" the first time. Instead, I'll sneak up on a perfect fit by making several cuts. And when the pieces finally slide together — well, that's what woodworking is all about.

Take the Walnut Cabinet on page 6, for example. Building the plywood case is pretty straightforward. Just follow the dimensions in the plans. But as the base, the doors, and the top are added, it's more important that the pieces fit the case. Not that the measurements match the plans.

FINISHING. When the project is built, there's one final step in the process: finishing. A finish can make or break a project, which is probably why I can be a little reluctant to try something new.

So when Kent, our Senior Project Designer, **suggested** we paint the base of the lamp table on page 18, I was skeptical. To me, wood and paint mix about as well as oil and water. Maybe it's because I've spent so much time stripping paint off old furniture that it seems like a crime to paint a new piece. But when Kent made a "mock-up" of what the finish would look like, I was surprised and impressed. The glass-smooth finish looked great.

OTHER NEWS

To celebrate our 100th issue last month, we decided to have an open house. Frankly, I didn't know what to expect. But I certainly didn't expect over 500 people to attend. We had visitors from as far away as Austria. And subscribers from California to Alabama planned their vacations around the open house.

I am deeply appreciative of this show of support. And I wanted to extend a special thanks to all who attended the open house, to those who worked hard to make it a success, and to all our readers who have made 100 issues of *Woodsmith* possible.

NEW INDEX. At the open house, a few of you reminded me that it has been a couple years since we've offered an updated index of back issues. How time flies.

Well, we got busy, and now there's a new and complete index of woodworking projects and information from issues 1-100 of *Woodsmith* and issues 1-23 of *ShopNotes*. The price of this index is $4.95, which includes shipping and handling. To order, you can call us at 1-800-444-7002, fax us at 515-283-0447, or write to us at P.O. Box 842, Des Moines, IA 50304. We'll be glad to send it right out to you.

NEW NAME. Speaking of new, we have a new corporate name — August Home Publishing. As many of you know, we recently launched a new gardening magazine called *Garden Gate*. To reflect this new addition, I thought a name change seemed appropriate. After all, while we plan to keep producing the best woodworking magazines on the market *(Woodsmith & ShopNotes)*, I hope to look to other areas that will help readers interested in improving their homes and enjoying hobbies.

Don

A LOOK INSIDE

Contents

FEATURES

Walnut Cabinet 6

It's the details that count: ball-tipped hinges, quarter-round molding, and decorative feet are just a few of the many features in this classic walnut cabinet

Molded Stub Tenon 14

You don't need an expensive router bit to make this joint. It can be made with the tools in your shop and a simple jig. We'll walk you through the procedure step-by-step.

Lamp Table 18

With its Shaker-style lines, this lamp table will fit well in a variety of settings. And it's easy to build. We've even included a quick shop-made jig for tapering the legs.

Spray Painted Finish 22

Get a smooth painted finish — without any expensive spray equipment. We'll recommend which paint to use and show you how to prepare the surface for professional results.

Serving Tray 24

This tray has several design features we find appealing: a maple panel that contrasts with a narrow cherry frame, some sculpted handles, and simple curved feet.

Reader's Jig 30

Need an extra hand? This assembly jig, sent in by Roger Balling of Santa Ana, California, uses a simple cam locking system to help you hold case pieces during assembly.

DEPARTMENTS

Tips & Techniques 4
Shop Notes 17
Talking Shop 28
Sources 31

Walnut Cabinet *page 6*

Molded Stub Tenon *page 14*

Painted Finish *page 22*

Serving Tray *page 24*

FROM FELLOW WOODWORKERS

Tips & Techniques

MITER GAUGE WEDGE CLAMP

• Trying to hold a long, wide board tight against the miter gauge when it's standing on edge, is nearly impossible. I tried clamping it, but my clamps don't have enough clearance. So I made a simple clamp that fits on the miter gauge bar.

The clamp consists of two pieces. A wedge and a block attached to the miter gauge bar, see Fig. 1. The block is a ¾"-thick piece of stock with two ¼" dowels glued in one edge. The dowels fit into mating holes drilled in your miter gauge bar.

I trimmed the ends of the block to hold different sizes of stock, see Fig. 2. On one end, the block is cut to hold a ¾"-thick piece. But on the other end, I cut the block to hold 1½"-thick stock. The trick here is to leave just enough room for the wedge to fit between the workpiece and the block.

To use the jig, position your workpiece against the miter gauge and tap down the wedge to lock it in place, see Fig. 3.

George Clark
East Windsor, New Jersey

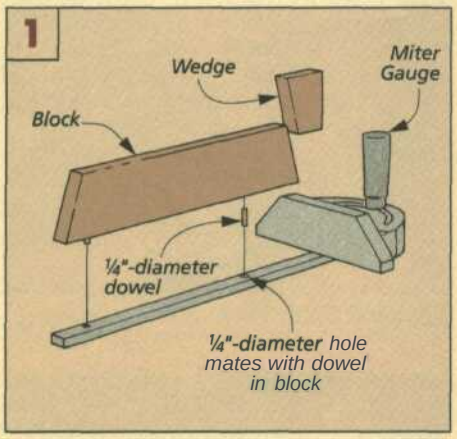

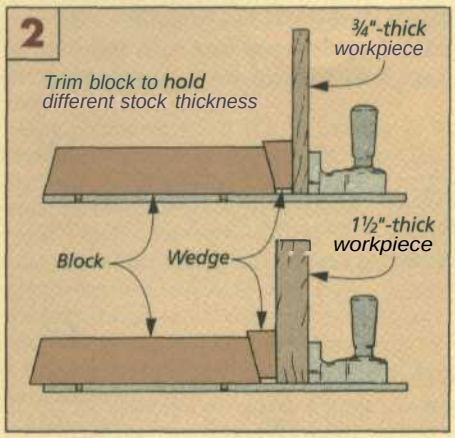

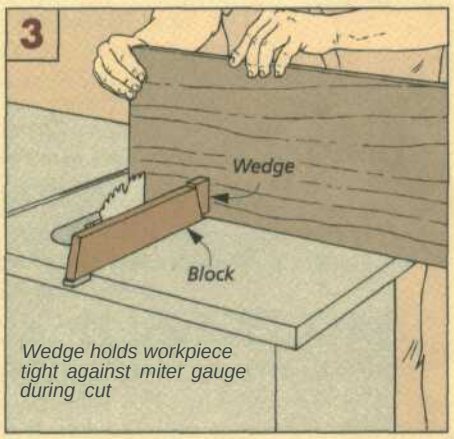

TRUNNION ADJUSTMENT

• I needed to align my saw blade with the miter gauge slot. But, on my contractor-style saw, that meant moving the trunnion (the casting that holds the blade). The problem was the mounting holes in the trunnion weren't large enough.

Then I came up with an easy solution. Instead of making the holes bigger, I made the bolts smaller. Simply remove a bolt, grind off the threads just below the head, and reinstall it in the saw, see detail below. After grinding all the bolts, you should have the room needed for any adjustment.

Keith King
Crooksville, Ohio

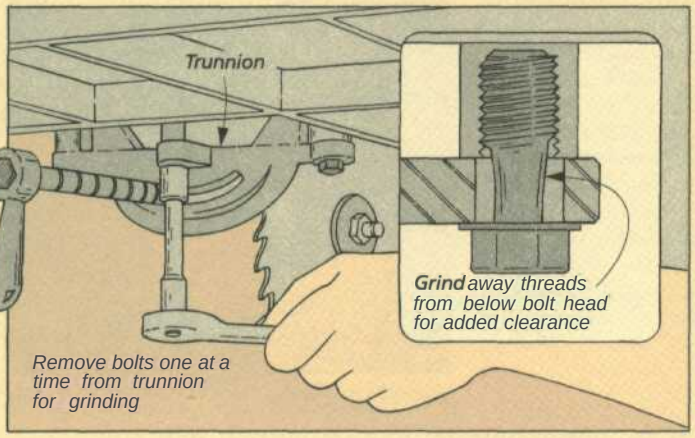

QUICK TIPS

TAPE TIP

• In my shop, double-sided carpet tape gets used a lot. But I could never find my scissors when it came time to cut it to length. To solve this problem, I keep a single-edged razor blade stuck under the end of the roll (sharp edge in) to cut the tape.

Guy Miller
Charlottesville, Virginia

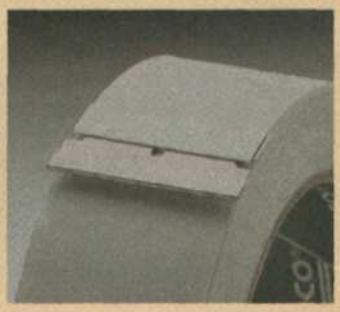

GLUE SPREADER

• A quick and effective way to spread glue on the edge of a board is with a plastic bread tie. The kind made out of thin plastic with a slot in one end. It works like a small squeegee to spread an even layer of glue across the joint. Then when you're done, just throw it away. And best of all, they're free.

Arthur Smith
Reading, Pennsylvania

SAWHORSE INSERTS

• I built the sawhorses featured in *Woodsmith* issue 97, but was a little reluctant to use them. I didn't want to "chew-up" the top with my saw. So before putting them to work, I added a replaceable insert to take the abuse.

This insert is simply a 1½" x 1½" square piece of scrap stock that sits on the top of the sawhorse. It's held in place by a couple of 3/4" x 1½" cleats. When screwed to the top, the cleats form a slot for the insert to fit into. If you're worried about hitting the screws when making a cut, simply glue or carpet tape the cleats to the top instead.

David Moss
Statesville, North Carolina

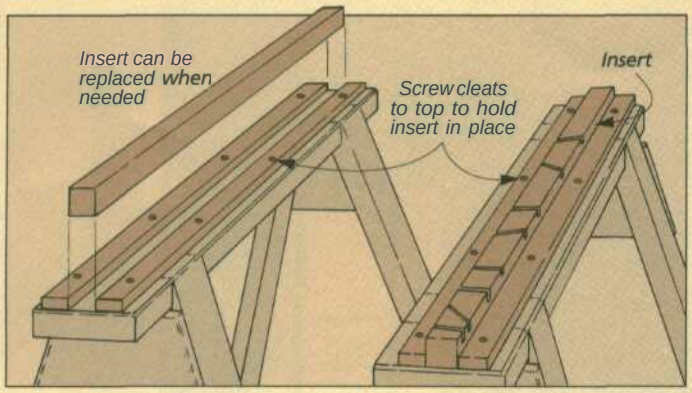

ROUTING HANDLES

• I like to make my own handles. But routing the edges on small pieces is difficult and dangerous. So to play it safe, I make handle blanks first and then glue them to a larger support board made from a piece of scrap. This way, I can keep a good grip on the workpiece as I run it past the router bit.

To use a support board, first cut out your blank and glue it to the board. Once the glue dries, rout the inside and outside edges of the handle blank. Finally, make a rip cut on the table saw to separate the finished handle from the support board.

Ronald Whitsel
Churchville, Pennsylvania

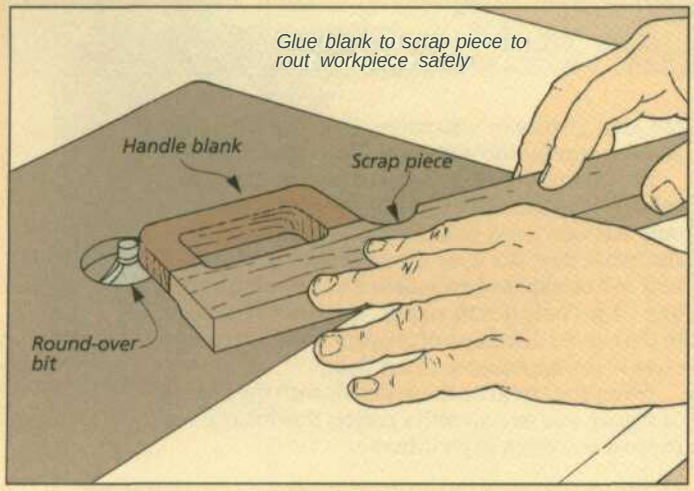

KEYHOLE SAW

• A keyhole saw works great to cut holes in tight places. But instead of buying one, I made my own. All you need is a sabre saw blade and a wooden or plastic file handle, see photo above.

For wooden handles, sharpen the shank end of the blade to a point before you drive the handle onto the blade.

For plastic handles, heat the blade and push it into the handle with a pair of pliers. Safety note: The hot blade can cause burns.

Brad Burns
Wapakoneta, Ohio

JOINTER ADJUSTMENTS

• When I got a tapered edge after running a board across my jointer, I knew I had a problem. My owner's manual suggested checking the infeed and outfeed tables to make sure they were parallel with each other. An easy way to check this is with a couple of shop-made "squares".

To make these squares, I use rectangular pieces of ½"-thick plywood — with the corners cut at exactly 90°. (A good set of metal framing squares will also do the job.)

Just set a square on each table so their edges touch, see drawing. Then check for gaps between the edges. A gap indicates the tables aren't parallel.

Wayne Beedy
Buckley, Washington

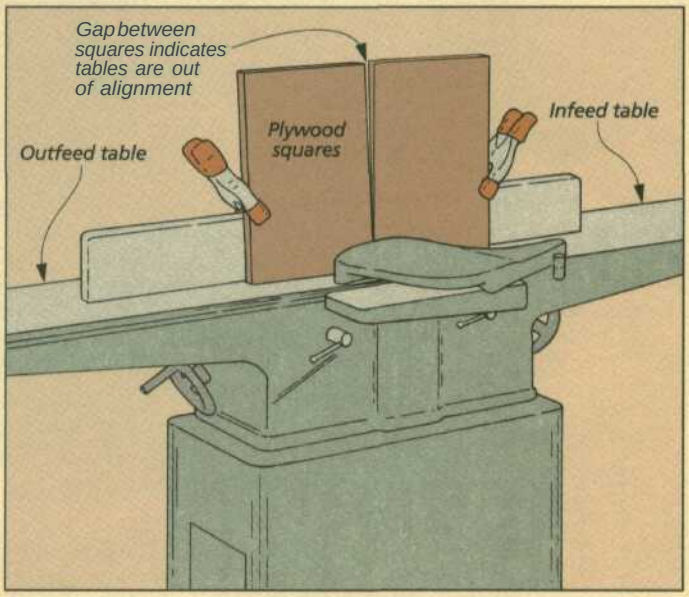

SUBMIT YOUR TIPS

If you would like to share an *original* shop-tested tip, send it to *Woodsmith*, Tips and Techniques, 2200 Grand Avenue, Des Moines, Iowa 50312.

Or if it's easier for you, FAX it to us at: 515–282–6741. Or use our E-Mail address: 75330, 2301@compuserve.com.

If we publish it, we'll send you $30 to $150, depending on the published length of the tip. Include a brief explanation and sketch or photo. And don't worry, we'll rewrite the tip and redraw the art, if necessary. Also, *please* include a daytime phone number.

Walnut Cabinet

An ogee base, built-in molding, and doors with two good faces. It's this attention to details that makes for a classic-looking cabinet,

Attention to details. That's what sets this cabinet apart from your average project. Some of these details are obvious. Others you'd probably miss unless they're pointed out to you.

The cabinet base is a good example. Instead of a plain piece of stock for the cabinet to rest on, there's an ogee profile cut into the front and side pieces. And to strengthen the miter joints used to join these pieces, a spline is added at both front corners.

A closer look at the doors reveals the molded stub tenon joint used to hold them together. Typically, molding is added after the door is glued together. But making the molding an integral part of the joint gives you a stronger door. There's more surface area for the glue to hold the door together.

The plywood panel glued in the door frame is also unique. It's a fact of life that thin hardwood plywood only has one good face. So what do you do when the inside face of a door (like the ones on the cabinet) will be exposed each time it's opened? The answer is to cover it with veneer. It doesn't add much to the overall thickness of the panel, but it certainly adds to the appearance of the door.

When you combine these details with the beauty of walnut, you end up with a project that looks good in most any room in your home.

Construction Details

Overall **Dimensions: 36½"x 31¾"x 13⅞'**
Hardwood: **13 bd.** ft. **of** 4/4 Walnut
Plywood: One 4x8 sheet of ¾" walnut
One 4x4 sheet of ¼" walnut
Finish: Wipe-on **oil-urethane**

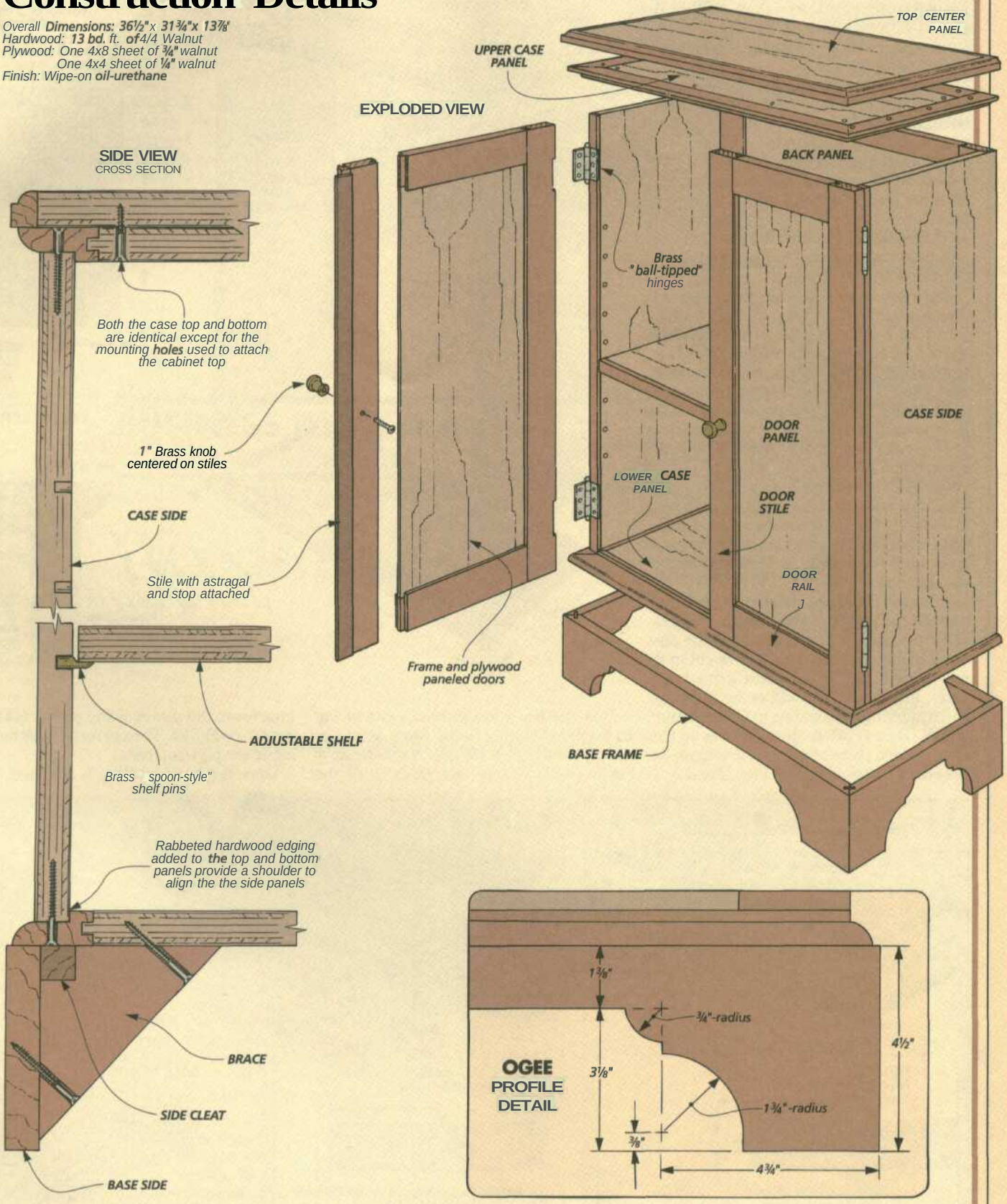

CASE

To build this two-door walnut cabinet, I started with the case. It's basically a large plywood box with an adjustable shelf added in the middle for storage.

TOP/BOTTOM **PANEL.** Two of the main parts of this plywood box are the top and bottom panels. These are ¾"-thick pieces of walnut plywood surrounded by four wide strips of solid hardwood molding.

Since both panels are identical (except for some mounting holes drilled in the top panel later), I made them at the same time. To do this, start by cutting the plywood **upper** and **lower panels (A, B)** to a final size of 10¾" x 28½", see Fig. 1.

The next step is to cover the edges of these panels with molding. But sometimes, it can be a little difficult to get molding aligned perfectly with the edges. Especially when you're using wide pieces. (Mine were 1¾" wide.) To help me do that, I cut a ¼"-wide tongue on each edge of the plywood panels, see Fig. la.

The important thing is to get the tongues centered on the thickness of the plywood. Otherwise the two surfaces won't be flush when the molding is installed. An easy way to do this is to flip the panel over after each pass. That way you're cutting from both sides until the tongue is centered on the panel's edge.

MOLDING. Once the tongues are cut, you can add the molding. These are just pieces of ¾"-thick stock planed to match the plywood thickness. Although they're cut to final width (1¾"), I left them extra long. Later, this extra stock will come in handy when mitering the molding to fit around the panels. Then I cut a centered groove on the edge of each piece to accept the tongue on the edges of the panel, see Figs. 2 and 2a.

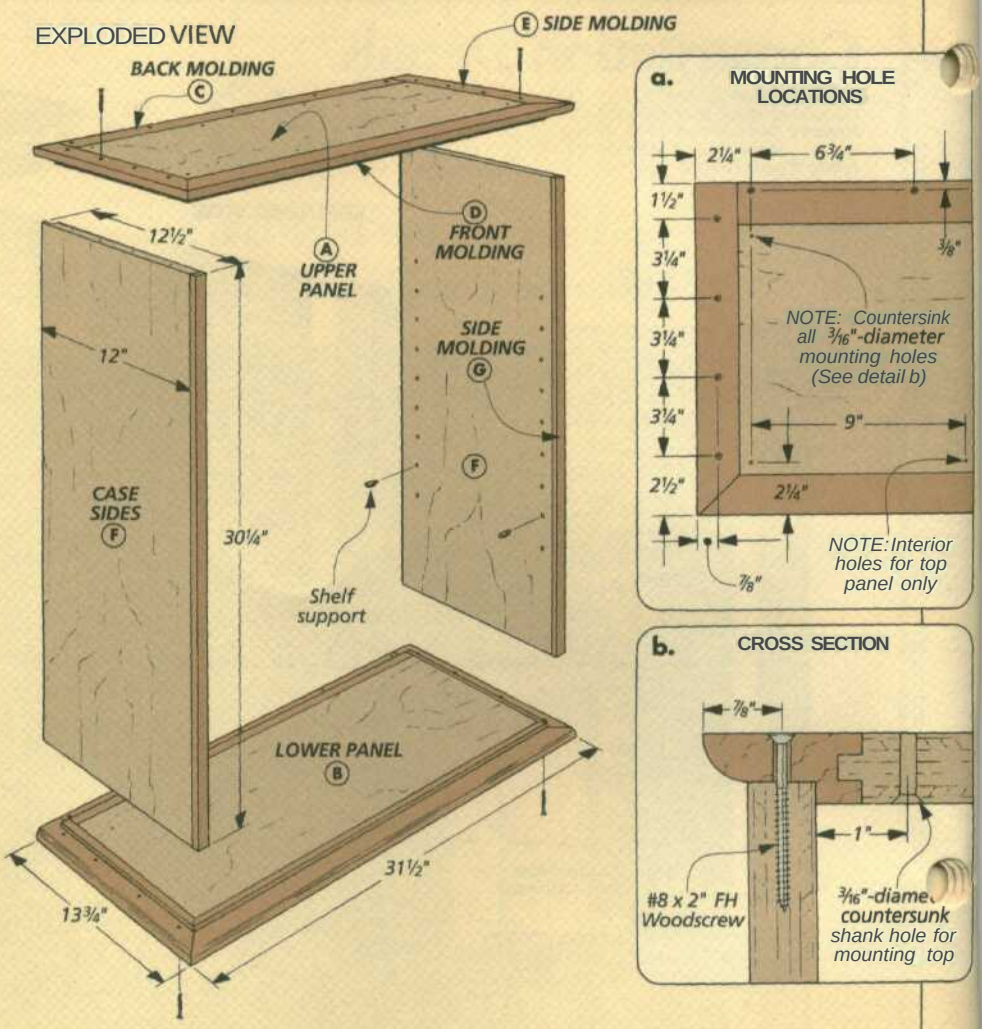

Now the **back molding** (C) can be cut to finished length. It's the same length as the plywood panels (28½"). A stub tenon is cut on each end of this piece to fit the grooves in the side molding pieces (added next), see Fig. 2b. Then glue the back molding to the plywood panel.

Once the back molding is attached, the

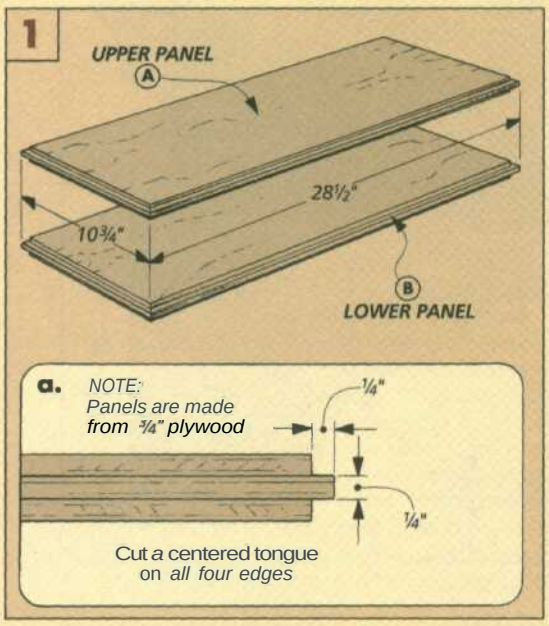

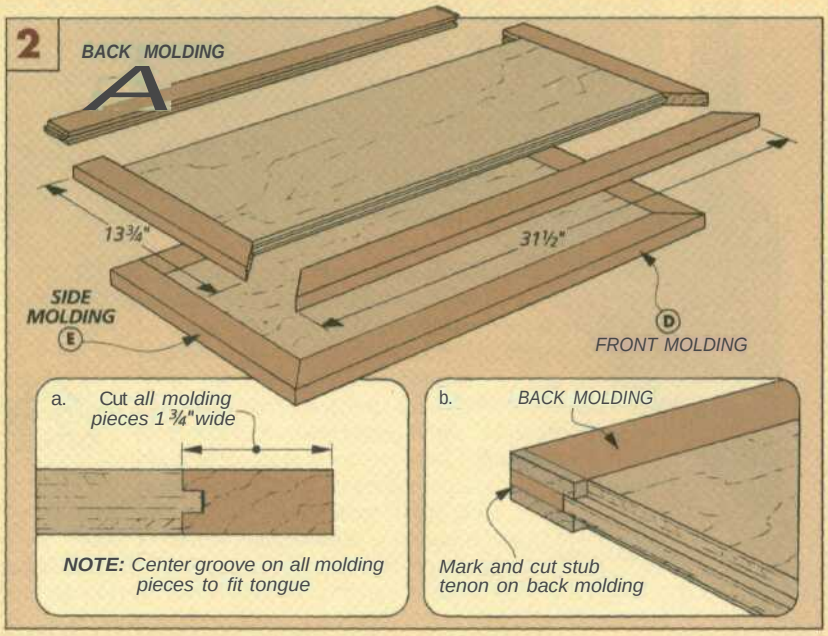

front molding (D) and side molding (E) can be cut next, see Fig. 2. This molding is a little different than the back molding. You don't have to cut stub tenons. Instead, the front and side pieces are mitered to fit around the center panel.

I mitered the front molding to length first and dry clamped it in place. Next, the side molding pieces are mitered on one end; then trimmed to length flush with the back molding. Now glue and clamp the front and side molding pieces to the panel.

RABBETED EDGE. With the molding installed, I cut rabbets around the top and bottom panels, see Fig. 3. These rabbets are all cut ¼" deep. But the rabbet on the back edge of the panel is ¾" wide and the rabbets on the front and side edges are 1¼" wide, see Figs. 3a and 3b. You need the extra width for a decorative profile added next.

EDGE PROFILE. Now to soften the edges of the top and bottom panels, a decorative profile is cut on the front and sides, see Fig. 4. (Don't worry about the back edge. Since you don't see it, it's left square.)

This profile is created with a ½" roundover bit in the router table, see Fig. 4a. But you'll have to use the fence when making the cut That's because there's not enough stock left on the workpiece for the bearing to ride against.

MOUNTING HOLES. After routing the profile, the last step to completing the top and bottom panels is drilling a series of mounting holes. Here is where the upper and lower panels differ. To hold the cabinet top added later, you'll need eight *more* holes in the upper panel (A), see exploded view and details 'a' and 'b' on previous page.

SIDES. Now you're ready to add the sides. I cut two ¾"-thick plywood sides (F) to a finished size of 12" x 30¼", see Fig. 5. But before they can be installed, there are a couple of things to do.

First, on the front edge of each side piece a thin strip of hardwood, side edging (G), is attached to cover the plies, see Fig. 5a. This edging is a ½"-thick piece of solid walnut cut to the same length and thickness as the sides and glued flush with the edge.

Next, there's a ¾"-wide x ½"-deep rabbet cut on the back edge of the sides, see Fig. 5b. This rabbet is used to hold the back panel added later.

ASSEMBLY. Now the sides pieces can be used to join the top and bottom panels to form the case. These pieces are simply glued and screwed together.

SHELF HOLES. Before moving on to the back panel, I wanted to drill ¼"-dia. mounting holes in the sides for shelf pins that are installed later, see Fig. 6. To help me do that, I used a Masonite template, see Fig. 6a. Simply set the template in the case to drill the holes. It helps keep the holes aligned so the shelf doesn't rock.

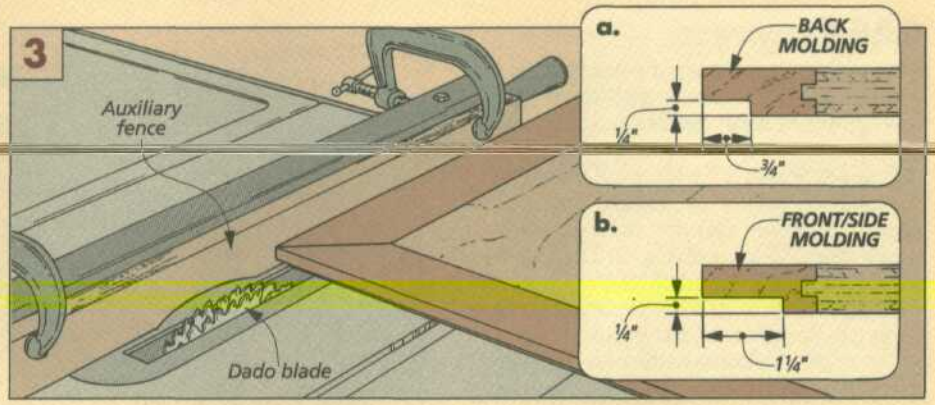

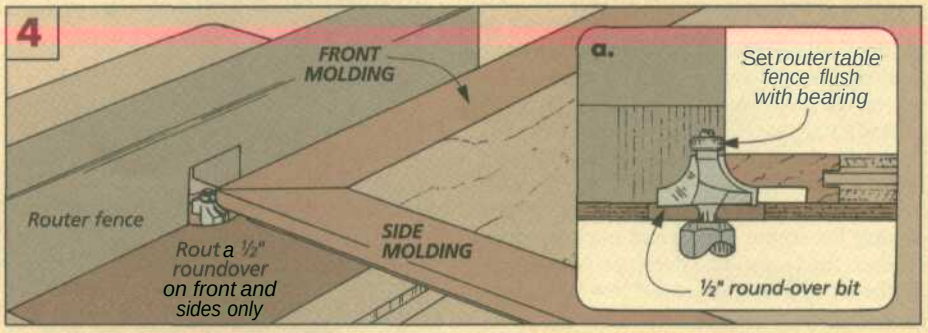

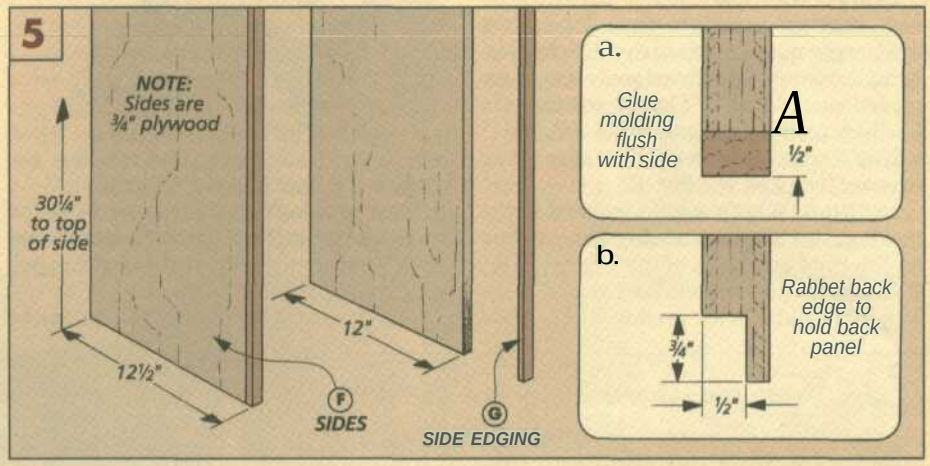

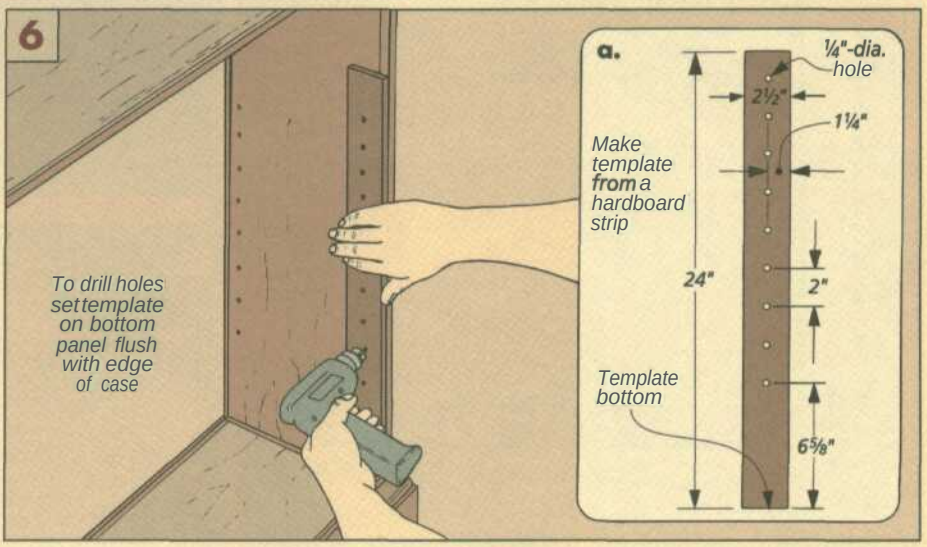

CASE *CONTINUED*

After **gluing-up** the case, the next step is to add the back. It's simply a plywood panel surrounded by **a** pair of stiles and rails, sized to fit the opening in the back of the case. (My opening was 30" wide x 30¼" high.)

FRAME. I started by cutting the frame pieces, the **stiles (H)** and **rails (I),** to finished width (2½"), see Fig. 7. Then to finished length (30¼" and 25½").

Next, a shallow groove, centered on the edge, can be cut on the frame pieces. It's cut to match the thickness of the plywood panel that will be added later, see Figs. 8 and 8a.

Then stub tenons can be cut on the ends of the rails to fit in these grooves. Sneak up on the thickness of the tenon by making several passes and flipping the workpiece **between** each one, see Fig. 9.

BACK PANEL. With the frame pieces complete, the back **panel (J)** is cut next. This **¼"-thick** piece of plywood is cut to fit in the frame. (My panel was 25½" x 25¾".) After gluing the frame pieces and back panel together, the assembled back can be installed in the case. Just glue and screw it in place, refer to exploded view, detail **'a.'**

CABINET TOP. The cabinet top is added next, once the back is in place. It's made a little larger than the top of the case to overhang the front and side edges, refer to exploded view, detail 'b.' The top consists of a **¾"-thick** plywood **center panel (K)** (13⅛" x 30¾") surrounded by pieces of molding to cover the plies, see Fig. 10.

MOLDING. What's a little unusual is the molding isn't all the same size. The molding on the front and sides of the cabinet is ½" wide and the piece on the back is a ¼" wide. The extra width is for routing a decorative edge on the front and side pieces.

Since you don't rout the back, I cut the **back molding (L)** to finished length first (30¾") and then glued it to the center panel, see Figs. 10 and 10a.

Now the rest of the molding pieces can be added. First, I mitered the **front molding (M)** to fit the length of the center panel and glued it in place. Next, miter one end of each **side molding (N)** with the opposite end trimmed flush with the back edge. Then glue and clamp the side pieces to the panel.

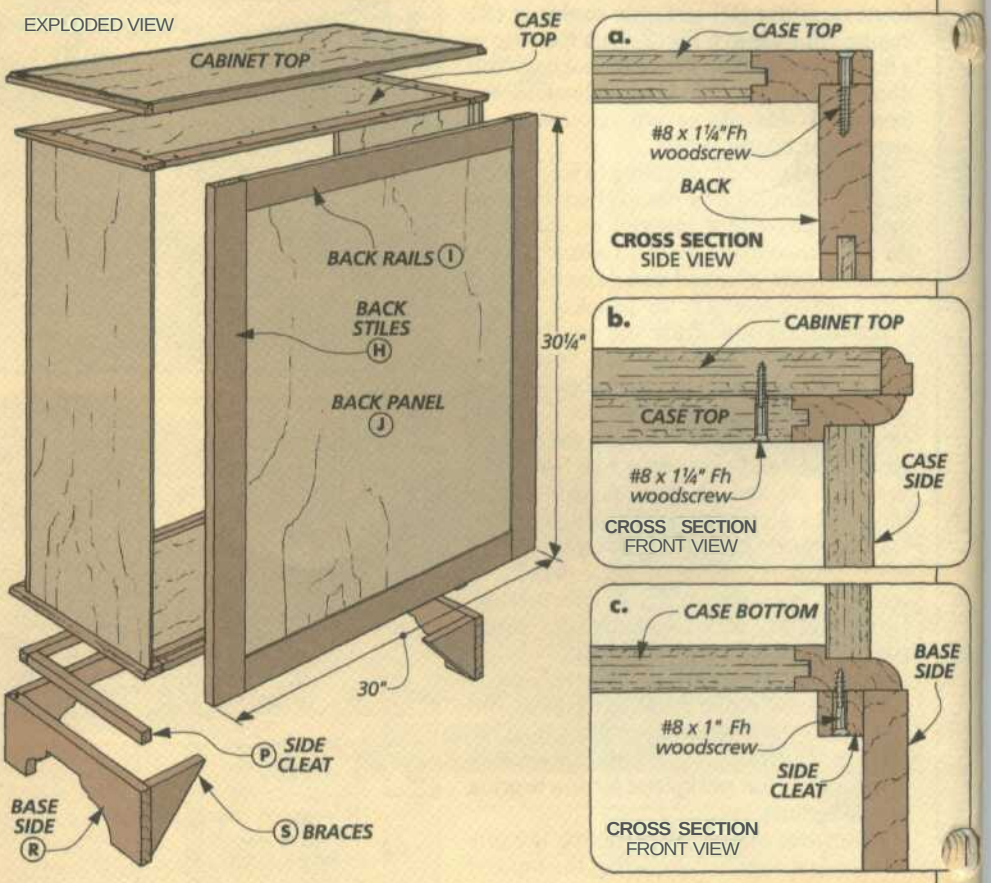

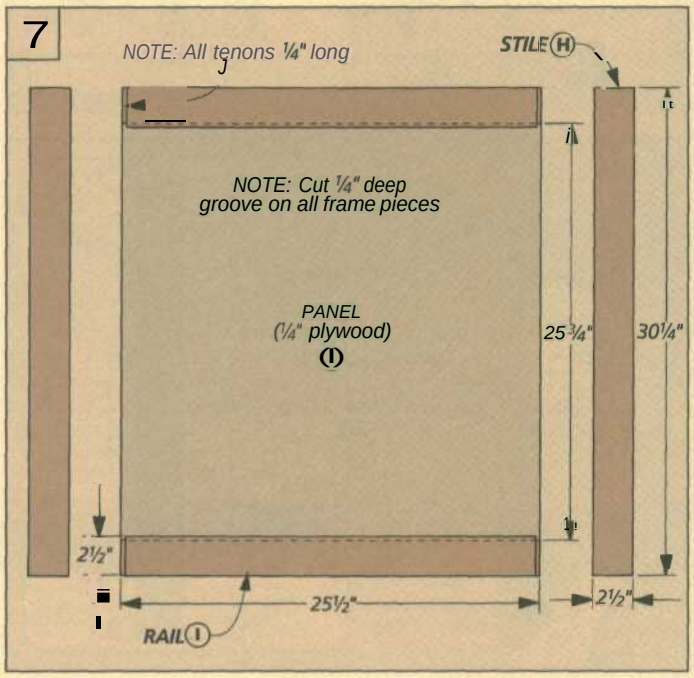

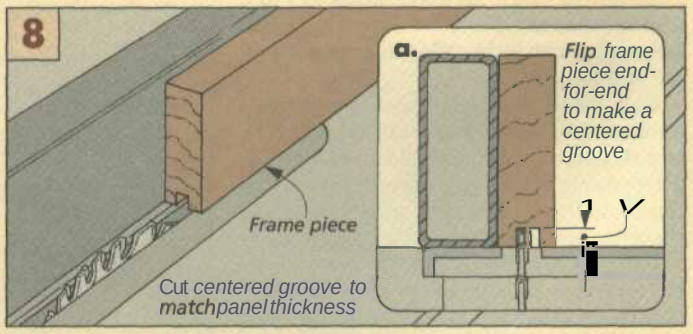

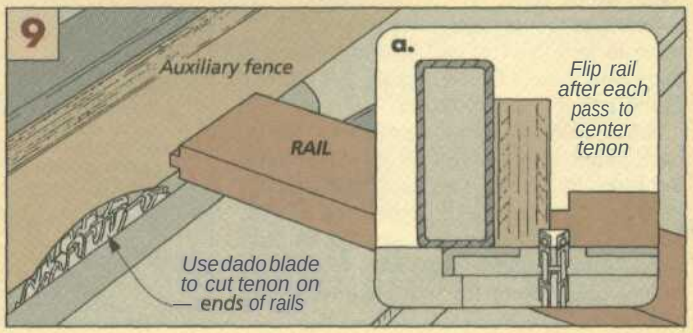

To complete the cabinet top, I used a ¼" round-over bit in the router table to rout the front and side edges, see Figs. 11 and 11a. Since the cabinet top is a large piece, I clamped a featherboard to my router table to help stabilize the panel.

INSTALLATION. Now you're ready to glue and screw the top to the case, see Exploded View. To do this, center the top from side-to-side, and keep the back edge of the top flush with the back edge of the case.

BASE. Once the top is glued and screwed in place, the case is almost complete. All that's left is adding the base. It's made from three pieces of solid stock mitered at the corners. And cut into the face of each piece is a decorative profile.

CLEATS. But before you can build the base pieces, three hardwood cleats, a front cleat (O), and two side cleats (P) have to be attached to the bottom panel, see Fig. 12. They hold the base to the cabinet. These cleats are ¾" x ¾" pieces of stock glued and screwed to the bottom, see Fig. 12a and exploded view, detail 'c.'

The interesting thing is where you position the cleats. They're setback ⅝" from the outside edge. This gives you a ⅛" reveal when the base pieces are installed.

BASE FRONT & SIDES. With the cleats in place, the base front and sides can be added next. They're made from ¾"-thick pieces of walnut mitered to fit around the bottom of the case, see Fig. 12.

Like the front molding (M), the base front (Q) is mitered at both ends. And the base sides (R) are mitered at one end and cut to length flush with the back edge.

To strengthen the mitered joint, I added a ⅛"-thick hardboard (Masonite) spline, see Fig. 13. But the ⅜"-deep kerf isn't centered on the miter, see Fig. 13a. This way, the spline is hidden with the base installed.

With the base mitered to fit, you can cut a decorative pattern on the front and side pieces, see Fig. 14. (Refer to page 7 for the pattern.) For a tip on cutting the base, refer to page 17. Now assemble the base pieces and glue them to the cleats, refer to exploded view, detail 'c.'

BRACES. Finally, to strengthen the back of the base, I added a pair of triangle-shaped braces (S), see Figs. 12 and 15. These are ¾"-thick pieces of stock, glued and screwed to the bottom panel and base sides.

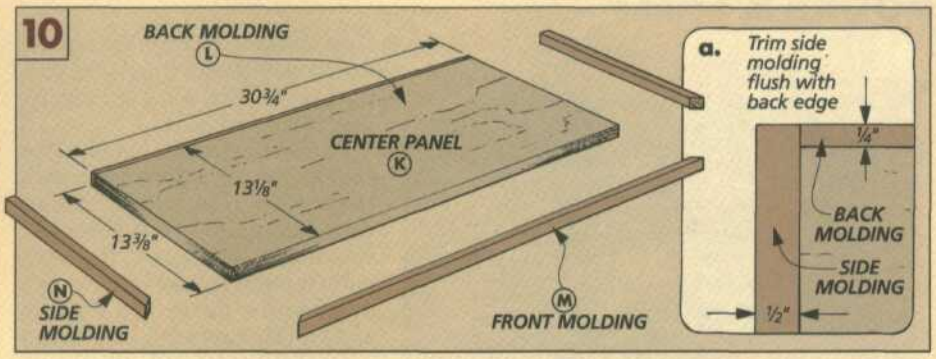

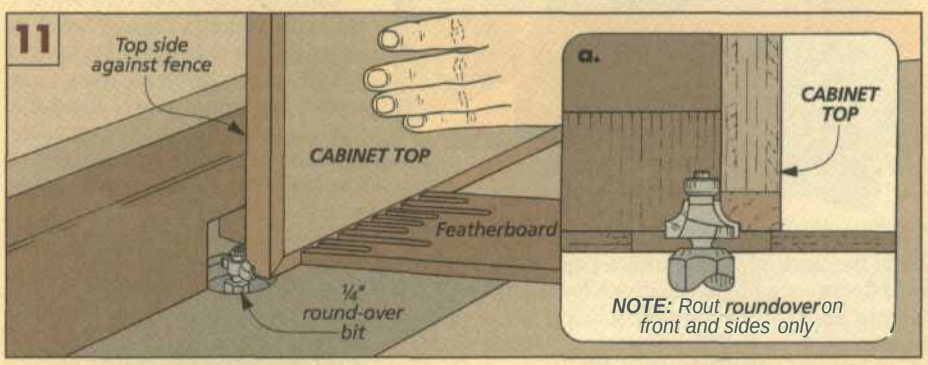

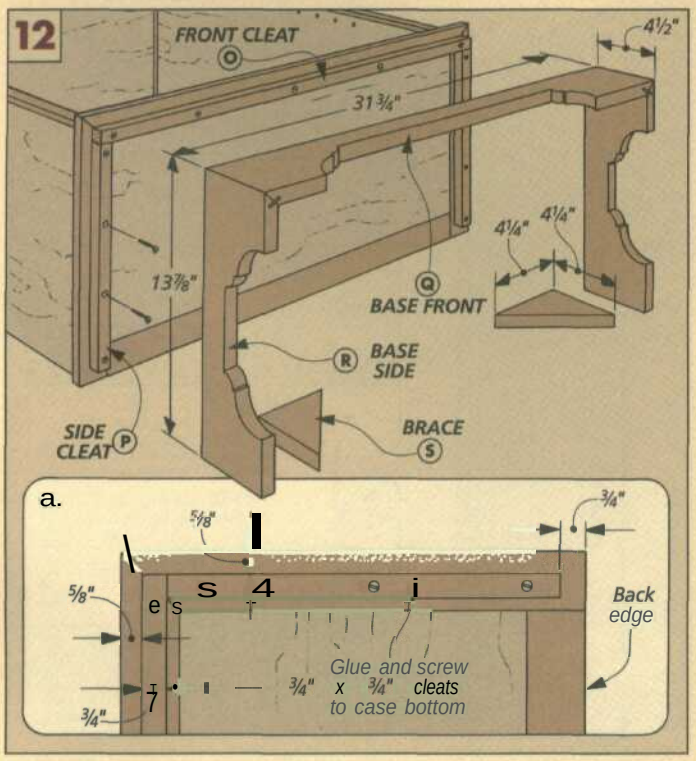

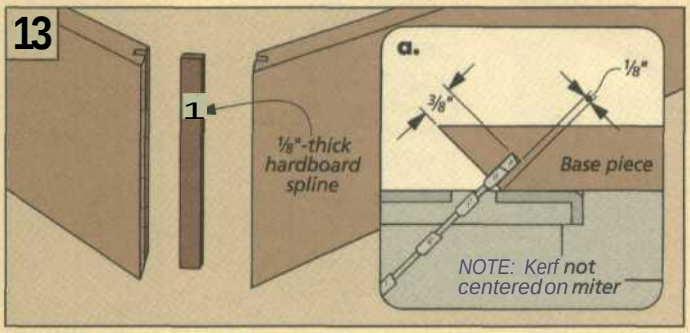

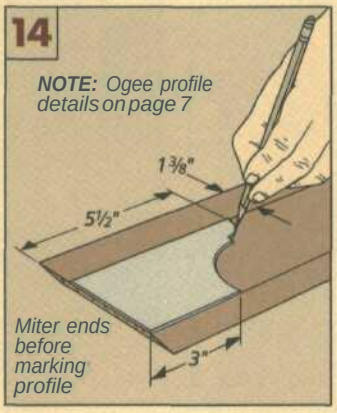

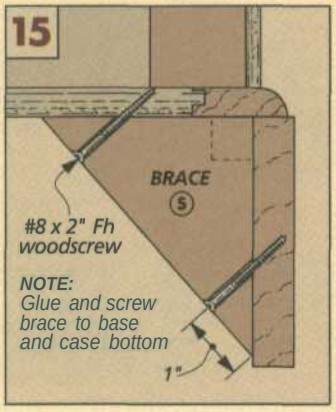

DOORS & SHELF

To match the paneled construction used to build the back of the cabinet, a pair of paneled doors are added to the front. But what's a little unusual here is the joinery. It's a molded stub tenon joint that has a decorative roundover on the inside edge.

STILES & RAILS. To build the doors, I started with the frames (stiles and rails). The width of all these pieces is the same (2¾"), but their lengths vary.

Determining the length of the stiles (T) is simple. Just measure between the top and bottom panels on the cabinet and then subtract ⅛" for clearance, see Fig. 16. (My stiles were 30⅛".)

But figuring out the length of the rails (U) is a bit more complicated. Here you'll need to take into account the width of the stiles, the stub tenons on the rails, the astragal in the middle, and ⅛" clearance between the doors, see Figs. 16 and 17. (My rails were 10½" long.)

Once the stiles and rails are cut to finished length, the molded stub tenon joint is cut next. This joint is a little more involved than your typical stub tenon. But I liked the idea of making the roundover an integral part of the frame rather than adding the molding later. For more on cutting this joint, refer to the article on page 14.

PLYWOOD PANEL. After completing the frame pieces, the next step is to add a door panel (V). This oversized piece of ¼"-thick plywood will be cut to fit in the opening between the frame pieces, see Fig. 16.

The panel is oversized because before actually doing any cutting, I covered the back side of the plywood with a piece of flexible-back veneer. That way, the panel will look good from either side with the doors open. With an oversized panel, I could trim both the veneer and the plywood to final size (10½" x 25⅝") at the same time.

ASSEMBLY. Now you can assemble the doors. For additional strength, the plywood panel is glued in the frame. Simply apply an even film of glue to the tenons on the rails and also in the grooves.

ASTRAGAL & STOP. At this point, the astragal and stop can be added. The astragal is a decorative molding attached to the stile on the left-hand door, see Fig. 17. It hides the gap normally found between two doors on a cabinet. And the stop, attached to the astragal, holds the left-hand door closed after you've closed the right-hand one.

Since the astragal (W) is a fairly small piece of molding to work with, I found it easier (and safer) to cut it out of an extra wide piece of ⅜"-thick stock. All it takes are three easy steps once your workpiece is cut to match the length of the door stile. (My astragal was 30⅛".)

First, there's a ⅜"-wide rabbet cut ⅛" deep on one edge, see Fig. 17a. Next, a ⅛" roundover is routed to create a beaded edge, see Fig. 17b. Then it can be ripped from the workpiece to its final width (¾"), see Fig. 17c. Finally, glue and clamp the astragal to the stile on your left-hand door.

Compared to the astragal, making the stop (X) is simple. It's just a ¼"-wide strip ripped from the edge of a ¾"-thick board.

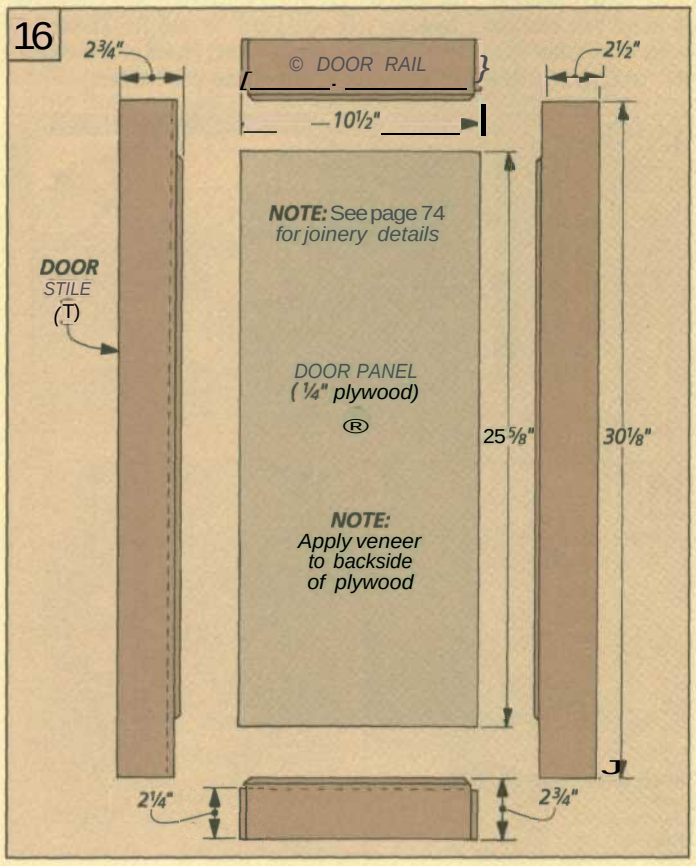

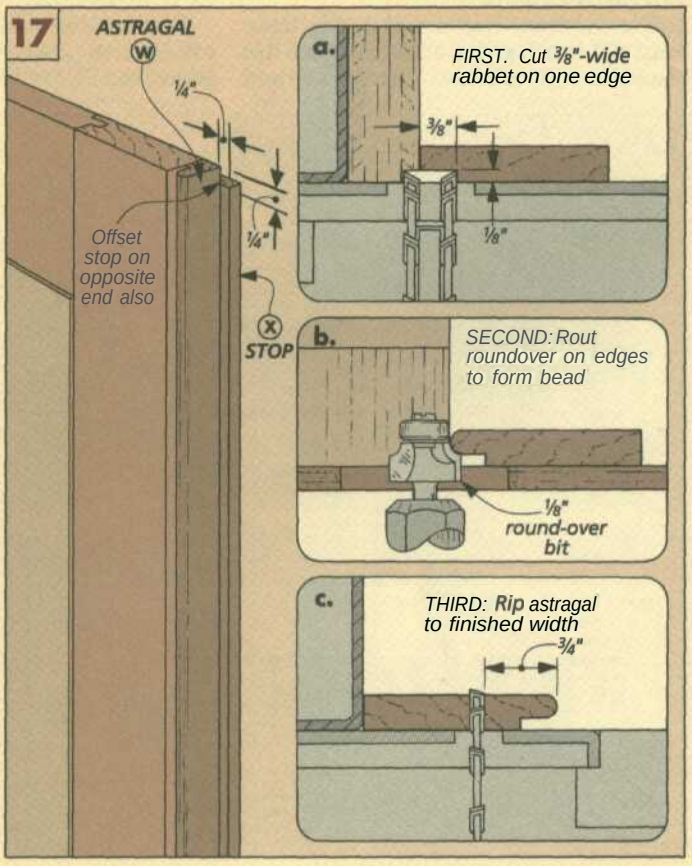

The stop is cut a little shorter than the astragal (29⅝"). This is for clearance between the top and bottom panels when the door is closed. Then it's simply glued to the back of the astragal with a ¼" overhang, see Fig. 17.

SHELF. Before hanging the doors, I made a shelf (Y). It's a piece of ¾"-thick plywood that's cut to fit inside the case, see Fig. 18. Added to the front is a strip of shelf molding (Z) that covers the edge of the plywood, see Fig. 18a. To hold the shelf in the cabinet, shelf pins are installed in the holes previously drilled in the case sides.

HINGES. After installing the shelf, the doors can be hung on the cabinet. There's nothing tricky here, but you do want a 1/16" gap at the top and bottom of the doors. Shop Tip: One way to do this is to set the doors in the cabinet and use a couple of pennies for spacers when marking the hinge location.

I started by cutting a mortise in the door to fit the hinges and screwed them in place. Then set the doors in the opening and transfer the hinge location onto the case sides. Now, mortise an opening in the sides and screw the hinges to the case, see Fig. 19.

KNOB & CATCHES. Finally to complete the cabinet, I added the rest of the hardware: a pair of ball catches and a pair of brass knobs, see Figs. 20 and 21.

The knobs are simply centered on the stiles, and the ball catches are positioned behind the right-hand door. You don't need any catches for the left-hand door. The stop on the astragal holds it closed. ❑

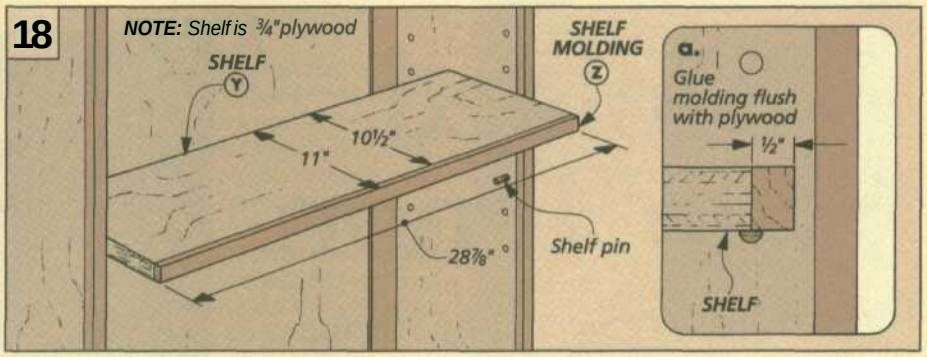

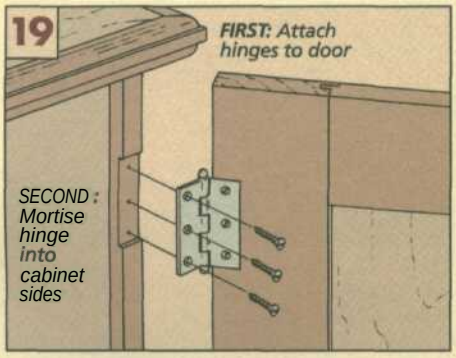

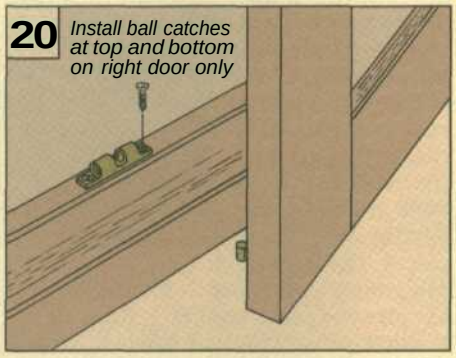

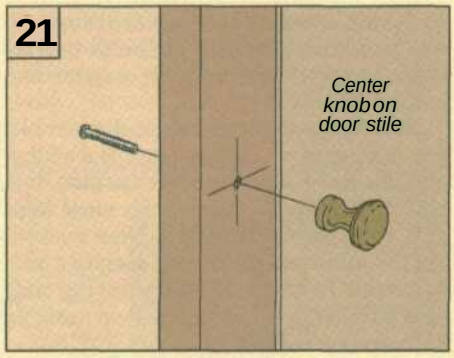

MATERIALS

CASE

A	Upper Panel (1)	¾ ply. - 10¾ x 28½
B	Lower Panel (1)	¾ ply. - 10¾ x 28½
C	Back Molding (2)	¾ x 1¾ - 28½
D	Front Molding (2)	¾ x 1¾ - 31½
E	Side Molding (4)	¾ x 1¾ - 133/4
F	Case Sides (2)	3/4 ply. - 12 x 30¼
G	Side Edging (2)	½ x ¾ - 30¼
H	Back Stiles (2)	¾ x 2½ - 30¼
I	Back Rails (2)	¾ x 2½ - 25½
J	Back Panel (1)	1/4 ply. - 25½ x 25¾

TOP & BASE

K	Center Panel (1)	3/4 ply. - 13⅛ x 30¾
L	Back Molding (1)	1/4 X ¾ - 303/4
M	Front Molding (1)	½ x ¾ - 31¾
N	Side Molding (2)	½ x ¾ - 13⅞
O	Front Cleat (1)	3/4 X 3/4 - 30¼
P	Side Cleats (2)	¾ x ¾ - 12⅜
Q	Base Front (1)	¾ x 4½ - 31¾
R	Base Sides (2)	¾ x 4½ - 13⅞
S	Braces (2)	3/4 x 4¼ - 4¼

DOORS

T	Door Stiles (4)	3/4 X 23/4 - 30⅛
U	Door Rails (4)	¾ x 2¾ - 10½
V	Door Panels (2)	¼ ply. - 10½ x 25⅝
W	Astragal (1)	3/8 X 3/4 - 30⅛
X	Stop (1)	1/4 X 3/4 -295/8
Y	Shelf (1)	3/4 ply. - 10½ x 28⅞
Z	Shelf Molding (1)	½ x ¾ - 28⅞

SUPPLIES

- (2) Ball Catches
- (2 pair) 2½" Ball Tip Hinges
- (2) 1" Brass Knobs
- (4) Shelf Supports
- (20) #8 x 2" Fh Woodscrews
- (18) #8 x 1¼" Fh Woodscrews
- (13) #8 x 1" Fh Woodscrews

CUTTING DIAGRAM

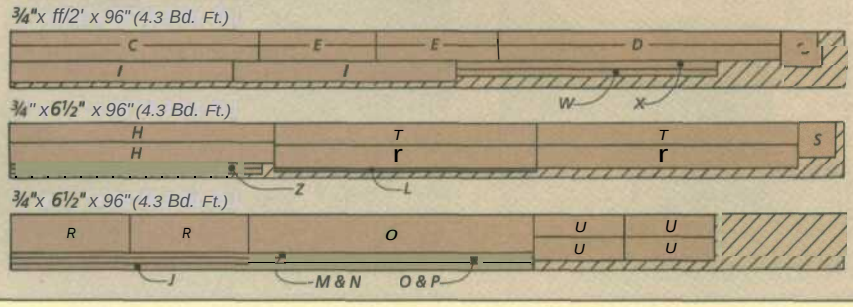

PLYWOOD

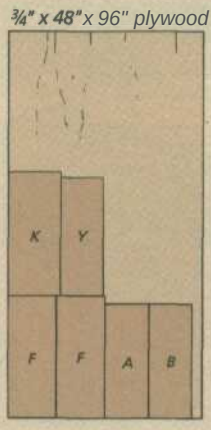

NOTE: Additional shelves can be cut from ¾" plywood.

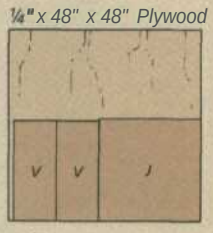

Molded Stub Tenon

The "built-in" molded edge replaces the decorative molding you typically add to a door frame

There are several ways to join frame pieces (stiles and rails) together on a paneled door. But one of my favorites is a molded stub tenon joint (like the doors used on the walnut cabinet on page 6). It's an easy way to add a decorative profile (a quarter round) to the inside edge on a frame and panel door.

Now I know they make special router bits you can use to cut similar joints. But adding a profile to the stiles and rails isn't too difficult. All that's required are a few more steps and some careful planning. Then you can get the same results without spending a lot of money. To do this, I simply use my table saw, a router, a chisel, and a shop-made jig (see the box below).

SIZING. The first step to making a "perfect joint" is to make sure your stiles and rails are cut to finished size. This not only means length and width, but also thickness. If the thickness varies between your frame pieces, they won't fit together flush during assembly.

GROOVES. Once I cut the stiles and rails to finished size, the next step is to cut a groove on one edge of all the frame pieces. The width of the groove should match the thickness of the plywood panel, see Fig. 1.

But to allow for the built-in molding on the edges of the door frame, I cut these grooves a little deeper (½") than the grooves for a typical stub tenon joint. This added depth strengthens the door frame once the plywood panel is glued in place.

Shop Tip: When cutting the groove on the frame pieces, I like to use a rip blade. The teeth are ground flat on top, so it cuts a flat-bottomed groove.

SHOP-MADE MITER JIG

The secret to fitting a molded stub tenon joint is to use a simple, shop-made jig. It fits over the frame pieces and can be used two ways. First, it guides your chisel when cutting the miters on the molded edge, see photo below right. And by flipping the jig over, it can also help when removing the waste from the molded edge on the stiles.

The jig is easy to make and consists of three parts. Just glue a spacer between two guide rails and cut a miter on one end, see drawing. This forms a pocket for the frame pieces to fit into. The depth of this pocket (2½") is equal to the distance from the edge of your stile or rail to the shoulder of the molded edge.

To use the jig to miter the molded edge, simply set it over your frame piece and clamp it in place. The angle helps guide your chisel to cut 45° miters.

By turning the jig over, it can be used to clean up the molded edge on your stiles, see Figs. 6 and 7 on page 16. The jig guides your chisel and keeps it square to the workpiece.

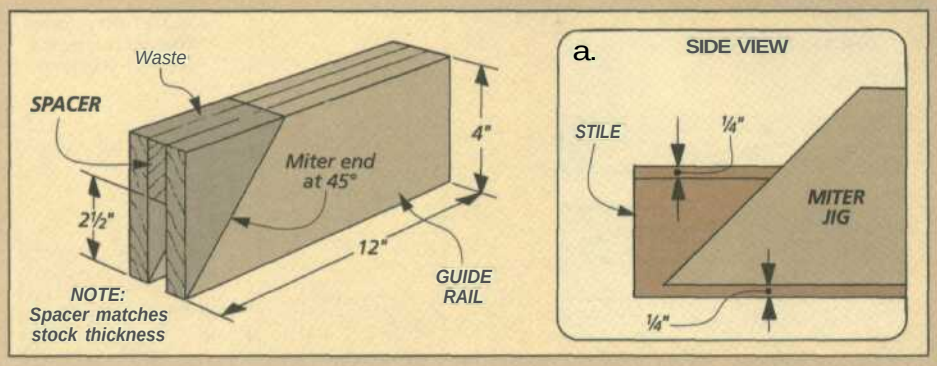

The only thing a little unusual is the groove location. It's not centered on the thickness like a typical stub tenon and groove joint. Instead, it's offset to provide room for the roundover, see Figs. la and 1b.

MOLDED EDGE. With the groove cut in all of the frame pieces, the molded edge can be routed next, see Fig. 2. To do this, all I used was a ¼" round-over bit in the router table.

The only problem using a round-over bit is the bearing on the end. If it falls into the groove cut on the edge of the frame pieces, it can gouge your workpiece. So instead of relying on the bearing to guide my workpiece, I use the router table fence.

I start by setting the router bit height. Simply adjust the fence to make a light cut Then check the size of the shoulder, see Fig. 2a. Once it's set to rout a ⅛"-deep shoulder, I move the router fence until the bearing on the bit is flush with the edge of the fence, see Fig. 2b. Now rout the molded edge on all the frame pieces.

TENONS. After you have completed the roundovers, stub tenons can be cut on the ends of the rails. I like to use a dado blade to cut the tenons. This way, each face can be cut to finished size (length and depth) with a single pass, see Fig. 3.

But there are a couple of things that are different about cutting the tenons for this type of joint. First, the tenons aren't centered on the thickness of the rails. Instead, they're offset to match the location of the groove already cut in the frame pieces.

Something else a little different is the length of the tenon. The front cheek is shorter (¼"-long) than the back (½"-long), see photo at right. Here's the reason why.

The back cheek is cut ½"-long to match the full depth of the groove that's already been cut in the stiles, see Fig. 3a. This way, once the frame pieces are assembled, the end of the tenon will fit flush with the bottom of the groove. The ½" length also lets the back shoulder of the tenon fit flush with the inside edge of the stile.

Once you have the tenon length set, adjusting the depth is easy. Simply raise the blade until the cut is flush with the back shoulder of the groove, see Fig. 3a.

The front cheek is shorter for a different reason. It has to match the height of the molded edge, see Fig. 3b. This way, just like the back shoulder, the front shoulder will fit flush with the inside edge of the stile.

Here again, the depth is set like the back cheek. But this time, it's cut flush with the *front* shoulder of the groove, see Fig. 3b.

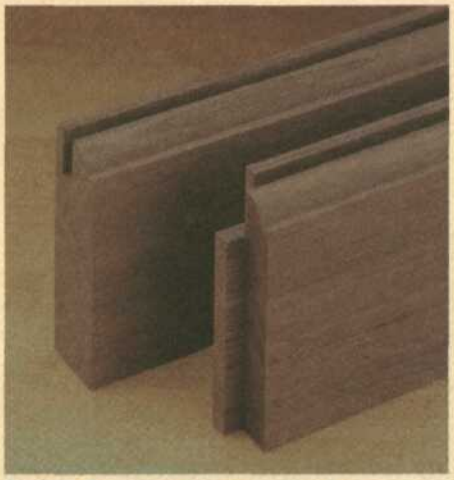

Molded edge. *After cutting a groove on the inside edge of the doorframe, a molded edge is routed on all the frame pieces. Then offset tenons can be cut on the rails.*

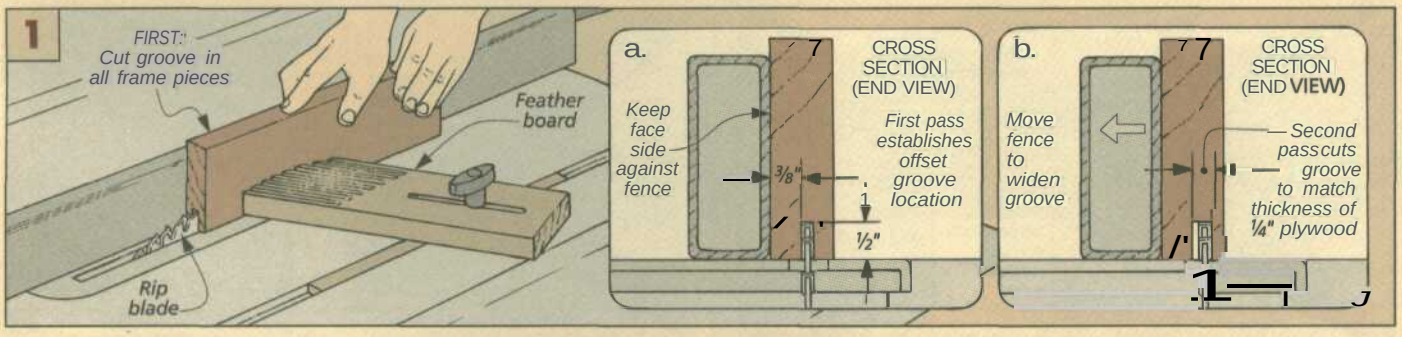

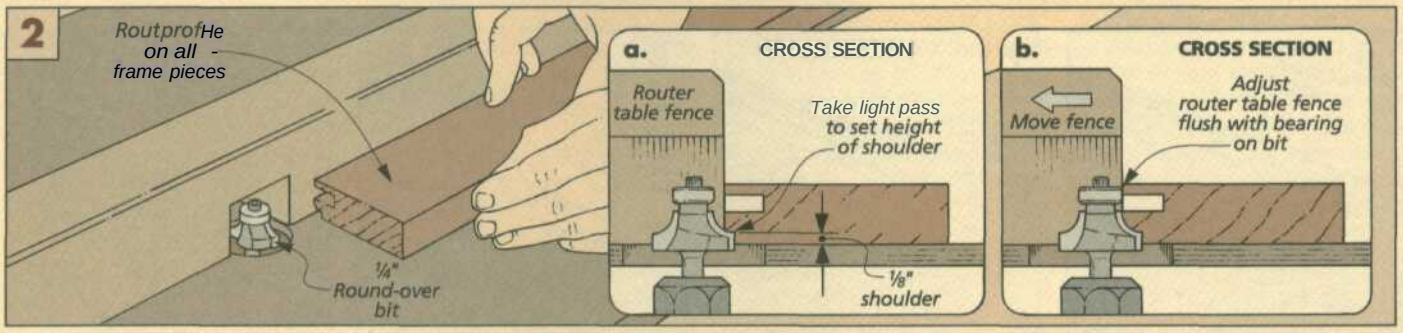

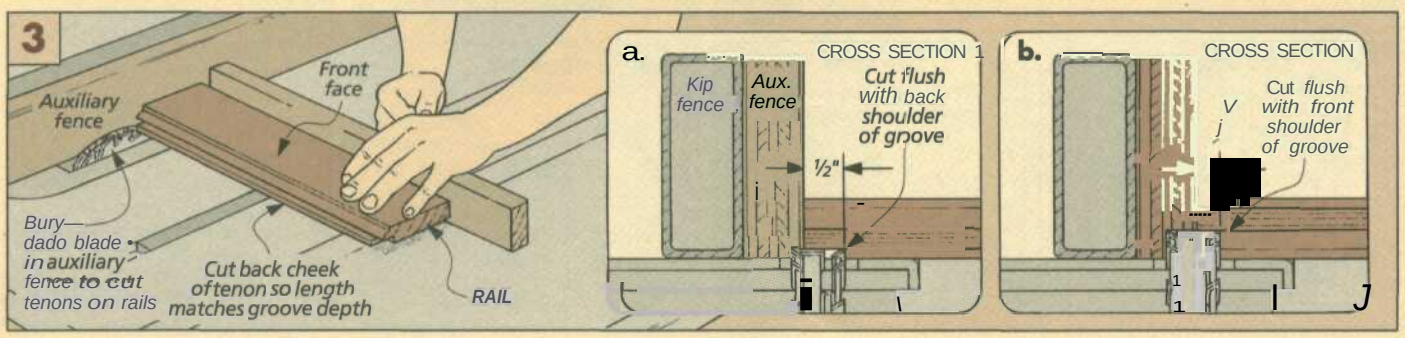

ASSEMBLY

After the tenons and grooves are cut and the profile's been routed, you might think this joint is ready to fit together. But before you can do that, there's still a little work to do to the molded edge.

MITER RAILS. The first step is to miter the molded edge at the ends of the rails. To do this, set the miter jig over the rail so the **45° angle** on the jig is aligned with the corner of the molded edge, see Figs. 4 and 4a and the box on page 14. Then use a sharp chisel to remove most of the waste. But on the final pass, I made a light cut and let the jig guide the chisel to cut the angle.

MARK STILES. Once you have the miters cut on the rails, the next step is to work on the molded edge on the stiles. Here, before the frame pieces will fit together, part of the molded edge has to be removed, and a mating miter has to be cut

The most accurate way to mark the location for the miters is to use the rails as a guide. Simply insert the rail in the stile and align a try square with the shoulder on the rail, see Fig. 5. Then make a mark on the shoulder of the stile to indicate where the angle starts, see Fig. 5a.

REMOVE WASTE. **Now you** can remove the waste from the molded edge. Here again, I used the miter jig. Only this time, I set the jig on its back and used the opposite end, see Figs. 6 and 6a.

The goal here is to remove most of the waste with light cuts. Just stop short of the layout line that marks the start of the miter, see Fig. 6a. Then, **once** you have most of the waste removed, rest the chisel on the edge of the jig to make your final cut, see Figs. 7 and 7a. But be careful here. You don't want to damage the ⅛" shoulder previously cut by the round-over bit.

MITER STILE. **Once the waste has been removed**, the final step to completing this joint is **mitering** the molded edge of the stile, see Fig. 8. Just like the rails, I used the angled end of the jig to cut the miter. Simply align the jig with the layout mark on the stile **before** you start to cut, see Fig. 8a.

It's a good idea to test the fit of the joint as you trim away the waste. To do **that**, I made a cut and slid the rail up to the miter to check the fit, see Fig. 9. The part of the rail that sticks out past the end of the stile is **a** good indicator of how much stock still has to be removed, see Fig. **9a**. Then **once all** the corners are complete, you're ready to glue the door together. ❑

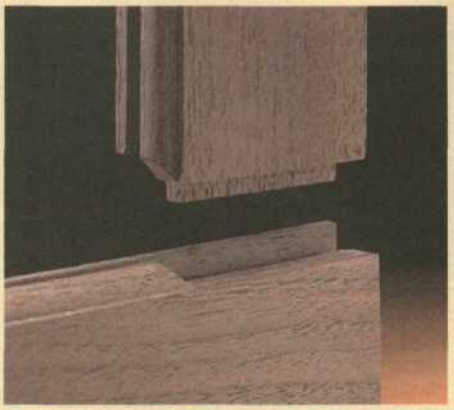

Remove waste. *The secret to making a tight-fitting molded stub tenon joint is carefully paring away the waste from both the shoulder and the molded edge.*

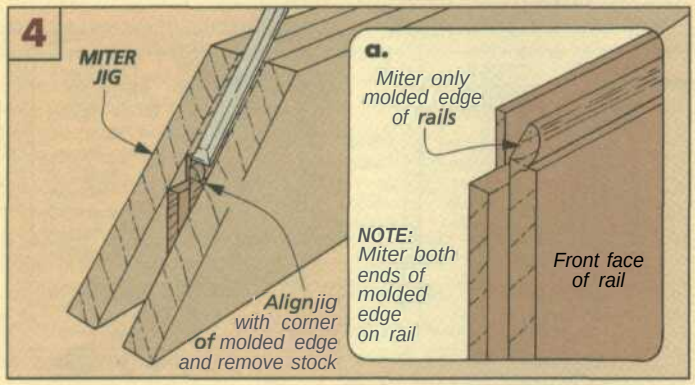

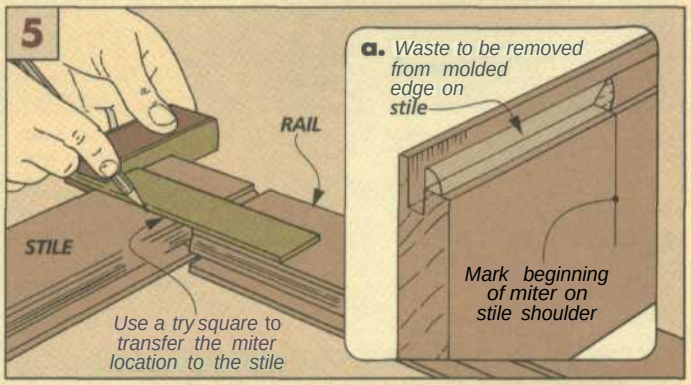

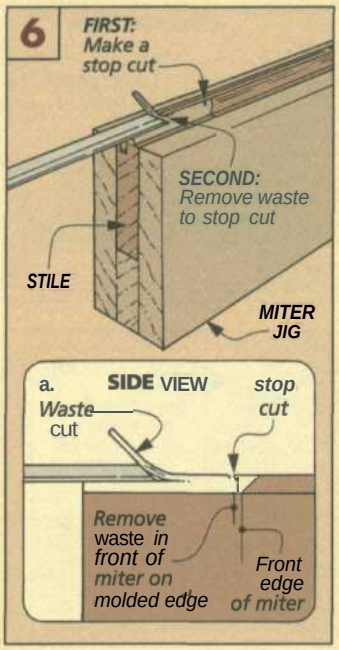

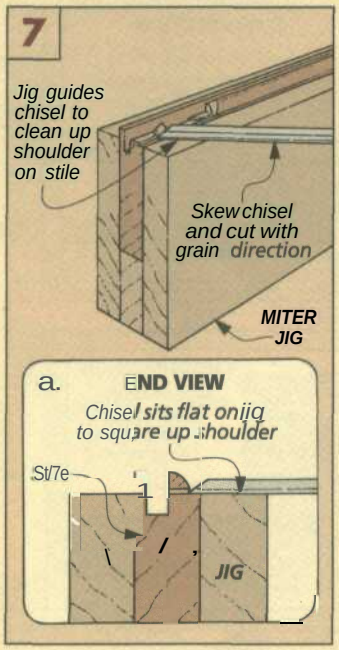

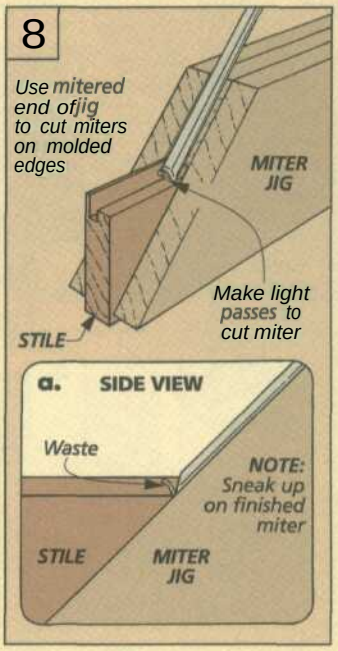

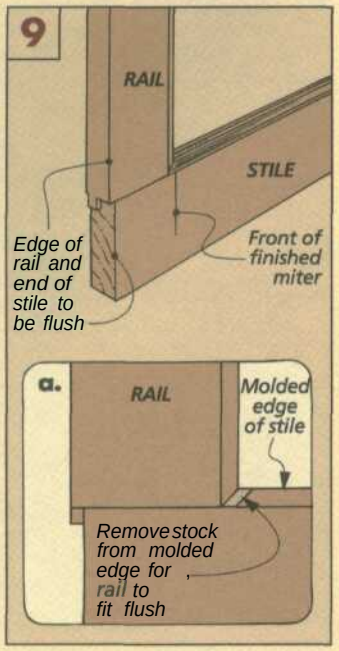

Shop Notes

AVOIDING STEPPED MORTISES

• A good way to cut mortises is on a router table. But if you use a non-plunge router there may be a problem. You could end up with small steps in the mortise, see photo. These steps can give you a poor glue surface and a loose fitting joint.

With non-plunge routers, you will usually have some play in the height adjustment mechanism. This means that each time the height is changed, the bit isn't in the exact same position it was before. And when routing deeper mortises, where it takes a couple of passes to reach the full depth, you end up with one or more steps.

The good news is, you won't need to buy a plunge router. Instead of changing the height of the bit, change the height of the workpiece. Simply lay a spacer, made of ¼" hardboard (Masonite), under the workpiece to raise it so the bit cuts less stock.

To cut mortises with a spacer, first set the height of the bit to cut the full mortise depth, see Fig. 1. Then, install the spacer and make your first pass, see Fig. 2. Now before you make the second pass, remove the spacer, see Fig. 3. Since you aren't adjusting the router height, the bit stays in the same location, and you don't end up with a small step in the mortise.

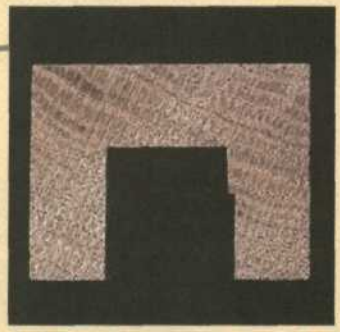

A After changing the height of the bit, some routers may leave a small step in the mortise.

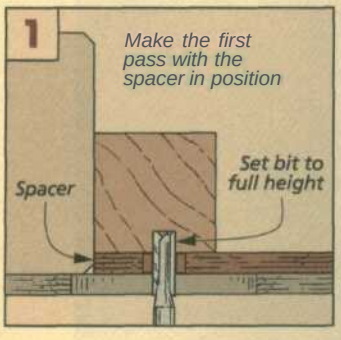

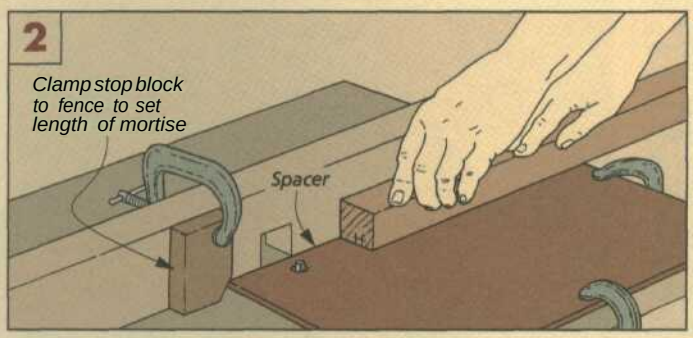

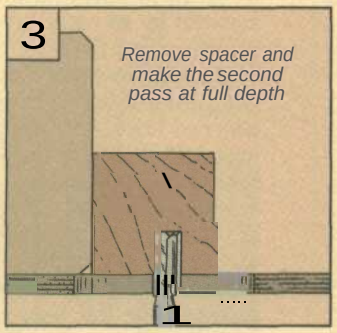

MAKING STRAIGHT CUTS BETWEEN PROFILES

• When you look at the base of the walnut cabinet (featured on page 6), you might expect the ogee profiles are the hardest parts to make. But making the straight cut between the two profiles is more of a challenge.

There's nothing tricky about cutting out the profiles. You just follow the layout lines with your band saw (or sabre saw) and then sand them smooth. But this won't work when cutting along the layout line that separates the two profiles.

Here, the goal is to have a line that's perfectly straight. If your blade wanders even a little, it's easy to see. So I don't try to cut right to the line. Instead, I'll cut on the waste side of the layout line leaving about 1/16" of stock.

Then I switch to a flush trim bit in my router table to rout up to the line. But to get a straight cut, you have to guide the bit. To do this, I use double-sided carpet tape to "clamp" a straightedge flush with the layout line, see Fig. 1. Now the bearing on the bit follows the straightedge to rout a straight line, see Fig. 2.

You'll have to stop short of the the profile because the diameter of the bit (½") won't let you get into tight corners. But it's simple to finish the cut. Just use a chisel to clean up the corner. Note: I left the straightedge in place to help guide my chisel.

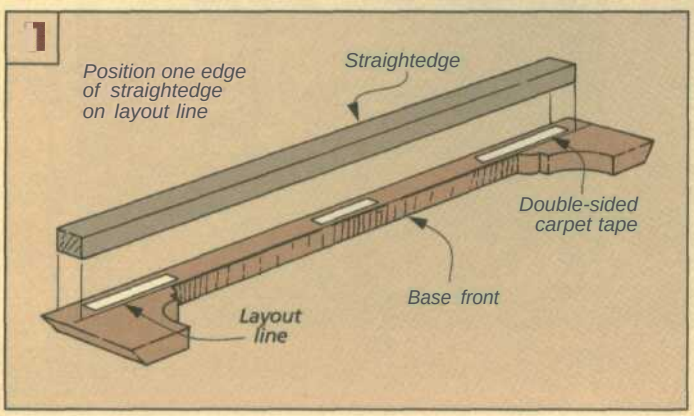

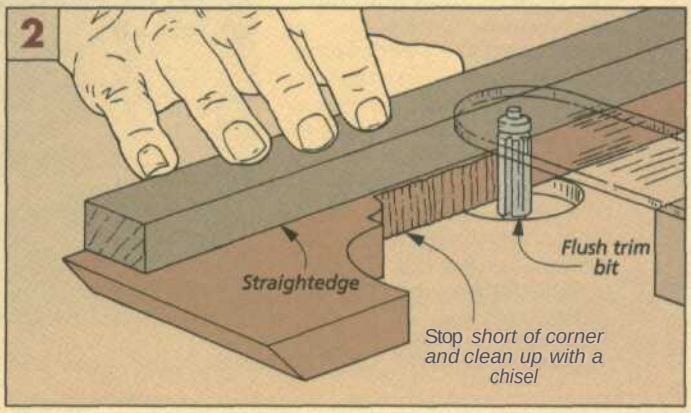

Lamp Table

There's nothing complicated about this table. You can build it in a weekend. And its classic, clean lines will fit a variety of settings.

Some projects are appealing because of the details of their design: hand-cut joinery, applied molding, or graceful curves. This lamp table, on the other hand, stands out because of its simplicity.

But simplicity of design isn't something that originated with us by any means. This table was inspired by an earlier group of woodworkers: the Shakers.

The Shakers were masters of good proportions and clean, unadorned lines. And we tried to include both these qualities in the design of this table.

DESIGN DETAILS. There isn't anything complicated or showy about this table. It doesn't have any drawers or applied molding. And to give the legs a light, graceful appearance, their inside faces are slightly tapered.

The design isn't the only thing simple about this table. It's also easy to build. The legs and aprons are joined with open mortise and tenon joints. The mortises are cut on the router table; the tenons on the table saw. And the legs are tapered with a shop-built jig, so they're no trick at all.

PAINTED FINISH. We used another design trick inspired by the Shakers. They sometimes used different types of wood to add contrast to a piece of furniture. Or they painted part of the project and left the rest natural. This natural contrast added interest to the design.

So instead of giving the whole table a clear finish, I dressed up the base by painting it black, see the article on page 22. The black really highlights the rich color of the cherry top.

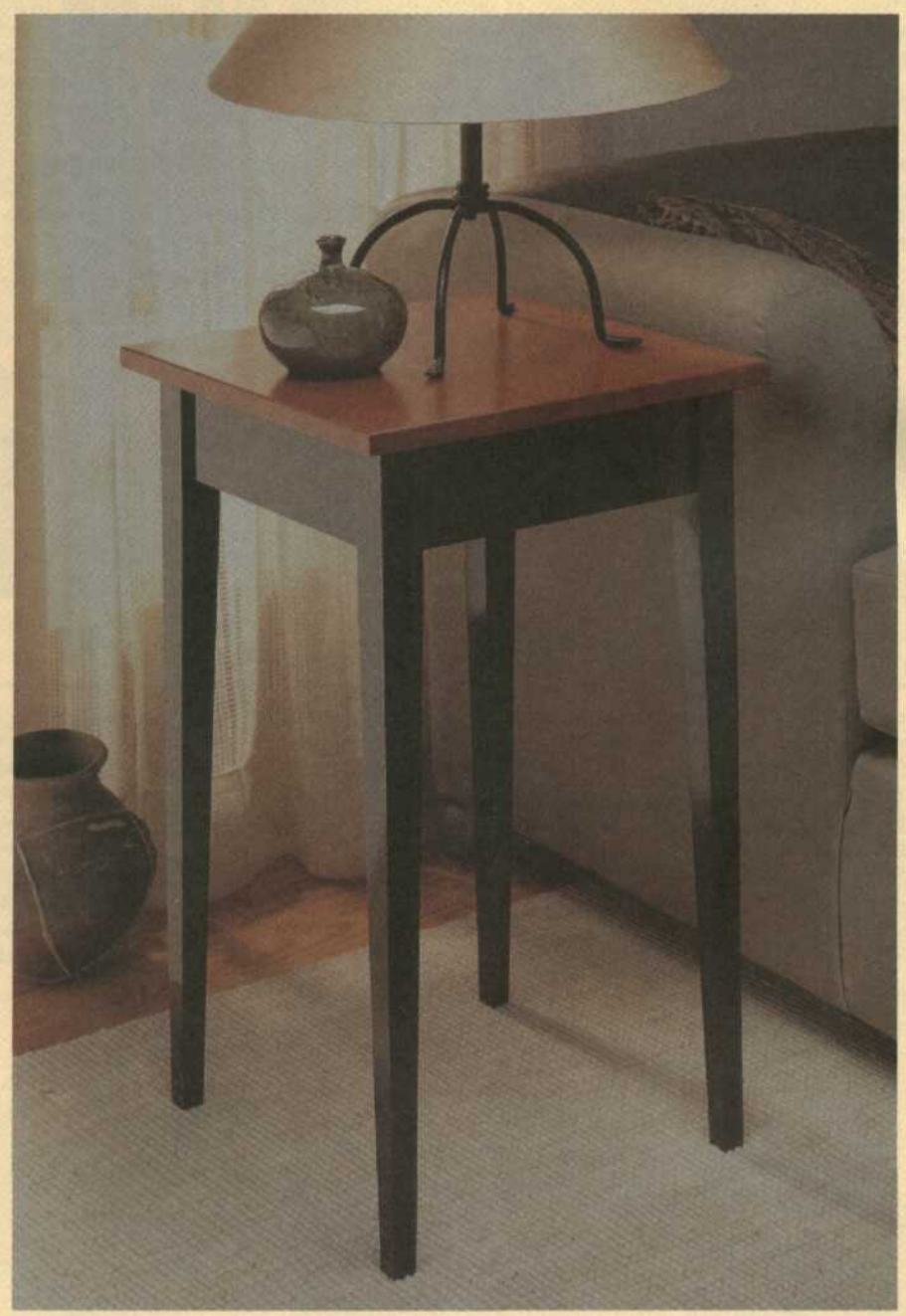

Construction Details

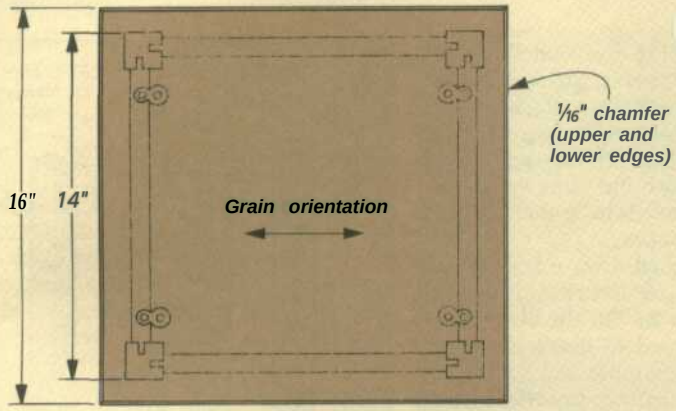

TOP VIEW

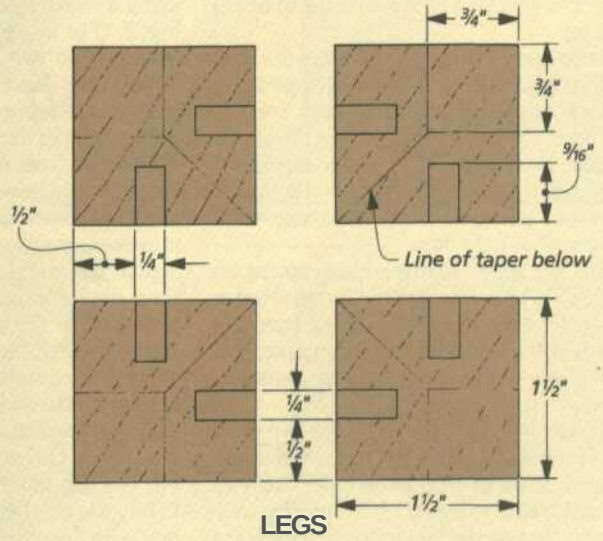

LEGS

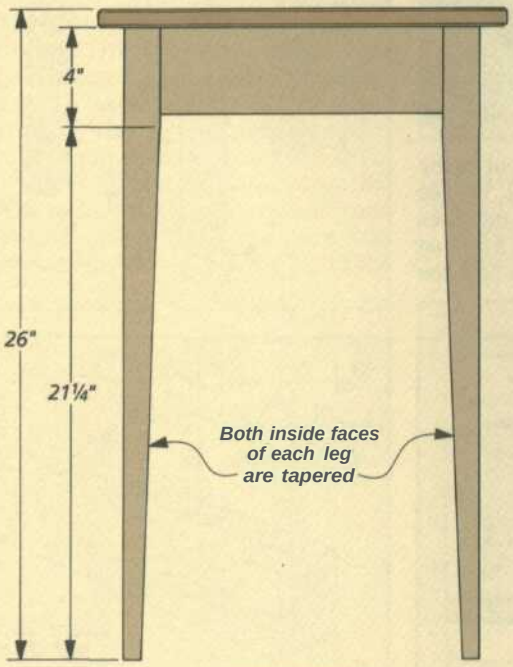

SIDE VIEW

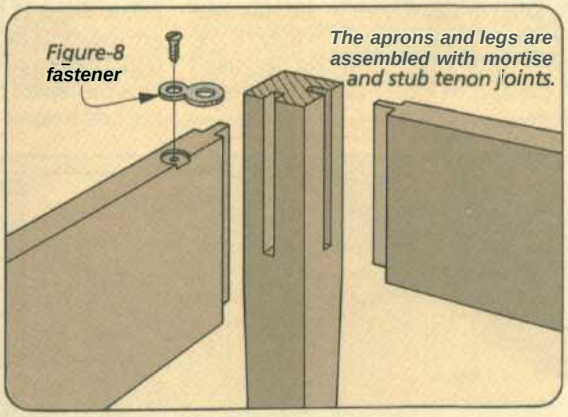

MATERIALS & SUPPLIES

A	Legs (4)	1½ x 1½ - 25¼
B	Aprons (4)	¾ x 3½ - 12
C	Top (1)	¾ x 16 - 16

- (4) Figure-8 Fasteners
- (8) #8 x ½" Flathead Woodscrews

CUTTING DIAGRAM

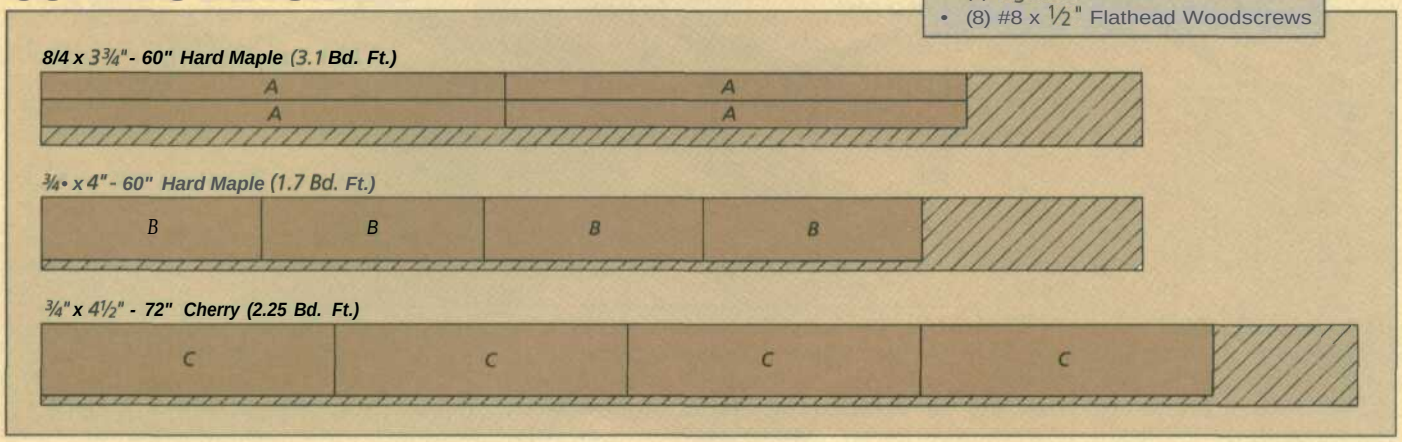

LEGS

There's nothing complicated about building this table. You start by making the legs. Then connect them with aprons, and finally add a top.

CUT TO SIZE. To begin work on the legs (A), I started with 8/4 stock and ripped four blanks 1½" square and 25¼" long, see Fig. 1. If you can't get a hold of 8/4 stock, you can laminate two pieces of ¾"-thick stock. But of course, this is a bit more work. And if you're not going to paint the base, you'll have a visible joint line.

Note: Because I was planning to paint the base, I didn't need to use the same wood as the top (cherry). Instead, I used hard maple, but you could also use soft maple, poplar, or alder — anything that has a smooth, closed grain surface.

To complete the legs, there are two more steps. First, cut mortises that the tenons on the aprons will fit into. Then taper the legs.

MORTISES. To begin, I laid out the mortise locations on the inside faces of each leg, see Fig. 1 and the Leg [illegible] on page 19. The thing to keep in mind here is the mortises on these legs aren't centered; they're ½" from the outside edge. I did this because I wanted the aprons closer to the front edge of the legs.

All the mortises are open-ended. This allowed me to rout them on the router table, using a ¼" straight bit and a stop block, see Fig. 2. (For more on this, see page 17.) But because the two mortises on each leg are offset, they don't use the same setup. The router table fence needs to be changed after the first set of mortises.

For the first mortise on each leg, the fence should be set ½" from the inside edge of the bit, see Fig. 2a. For the other set of mortises, you'll need to move the fence. Again, the magic number is ½", but this time, the ½" is the distance from the *outside* of the bit to the *outside* edge of the workpiece, see Fig. 2b.

Now to complete the mortises, all that's left for you to do is square up the ends with a chisel, see Fig. 3.

TAPERS. Once the mortises are cleaned up, you can taper the legs. You won't need to buy a special jig to do this. A simple shop-made jig does the job well.

To cut the tapers, first lay them out on the inside faces of the legs, see Fig. 1. (These are the same faces that you cut the mortises on.) Then to cut the tapers, I used a jig that cuts the tapers quickly on the table saw, see the box below.

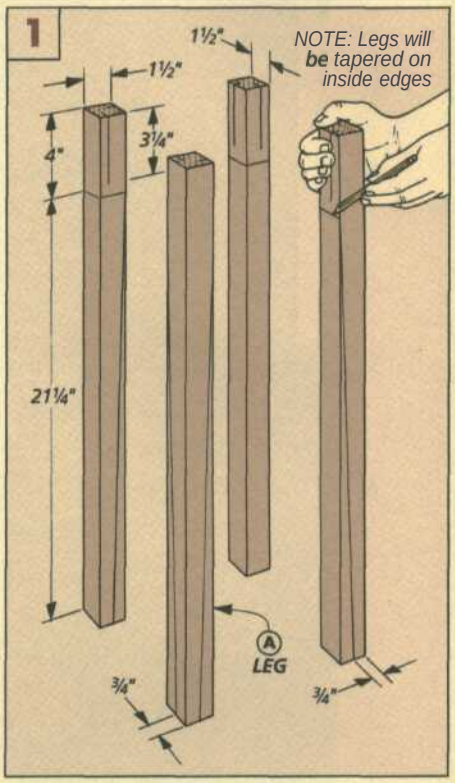

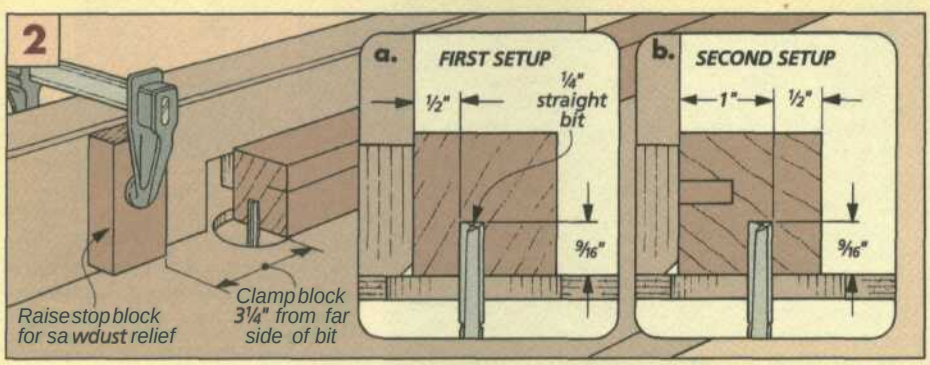

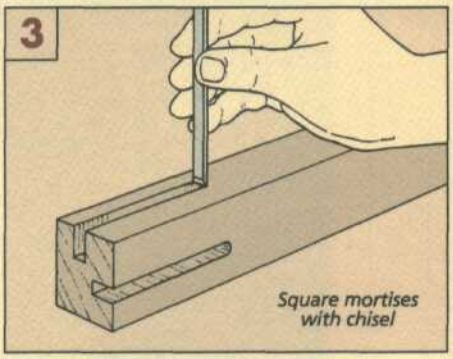

FIXED-ANGLE TAPER JIG

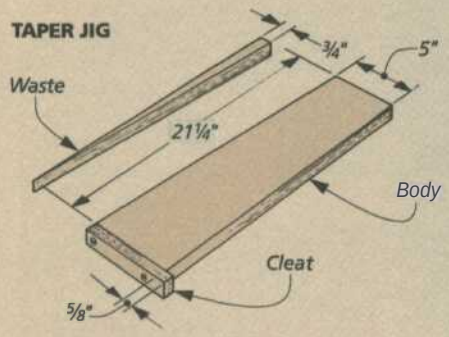

Building the Jig. *This plywood jig lets you taper two faces of a leg. The body of the jig matches the length and angle of the taper. The cleat supports the workpiece.*

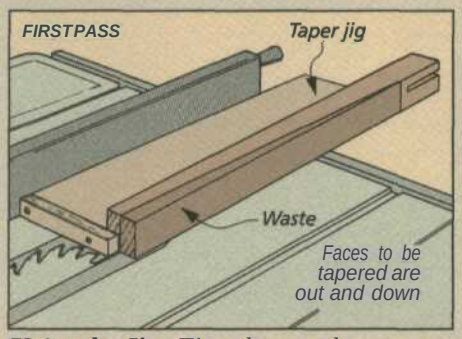

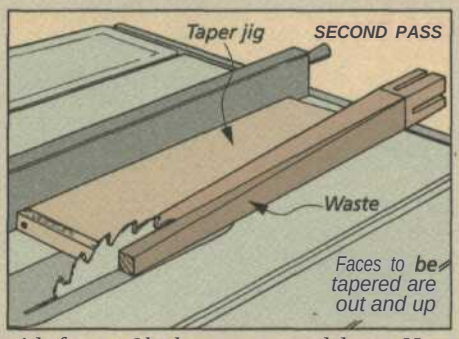

Using the Jig. *First, lay out the taper on the legs. Then set the angled face of the jig against the rip fence with the cleat toward the blade, and set a leg in the jig so the inside faces of the leg are out and down. Next set the fence so the blade aligns with the lay-out marks. Cut the first taper. Then rotate the leg 90° and cut the second taper.*

APRONS

With the legs complete, I turned my attention to the four aprons (B). I began by cutting them to size (3½" x 12"), see Fig. 4.

TENONS. The next step is to cut tenons that are centered on the ends of the aprons, see Fig. 4. To do this, I used a dado blade buried in an auxiliary fence. And a miter gauge with a backing board supports the workpieces and prevents chipout.

Though the mortises are **offset,** the tenons should be centered. So gradually raise the dado blade, flipping the piece between passes, until the tenons fit the mortises.

Next, you want the length of the tenon to match the mortise. To do this, I cut a shoulder at the bottom of the tenon by standing the apron on edge, see Fig. 5. The height of the blade (¼") should be right, but check your pieces just to make sure.

ASSEMBLY. Once the tenons have been **cut,** the base can be assembled. To do this, first glue up two sub-assemblies: two legs and an apron. Then join the **sub-assemblies** with the two remaining aprons, see Fig. 6.

FASTENERS. The last **step** is to prepare the base for attaching the top. **I used four** figure-8 fasteners, see Fig. 7. They're more than just an easy way to connect the top to the base. They allow the panel to expand and contract with changes in humidity.

To install the figure-8 fasteners, drill two 9/16" holes, ⅛" deep in two of the aprons, see Fig. 7a. This hole is offset ¼" toward the inside of the apron and acts as a shallow mortise for the fastener. With the holes drilled, the fasteners are simply screwed in place.

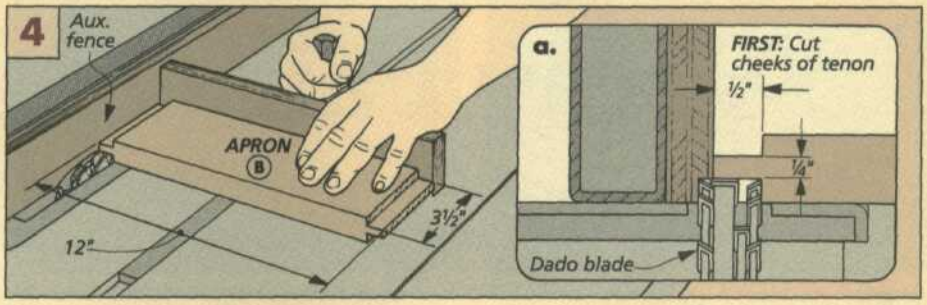

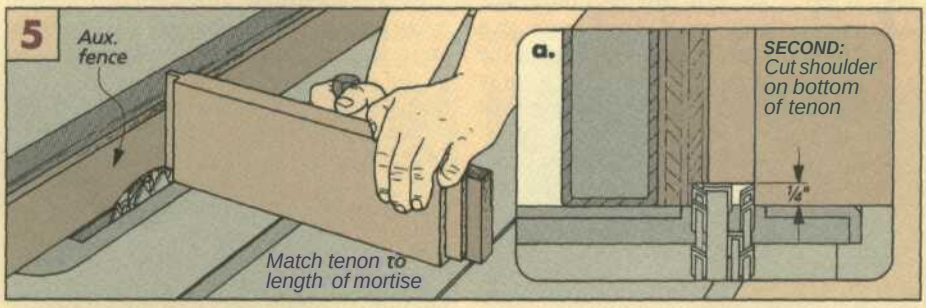

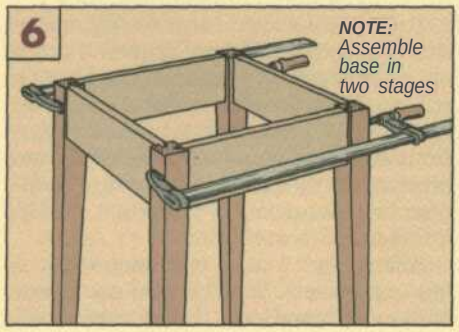

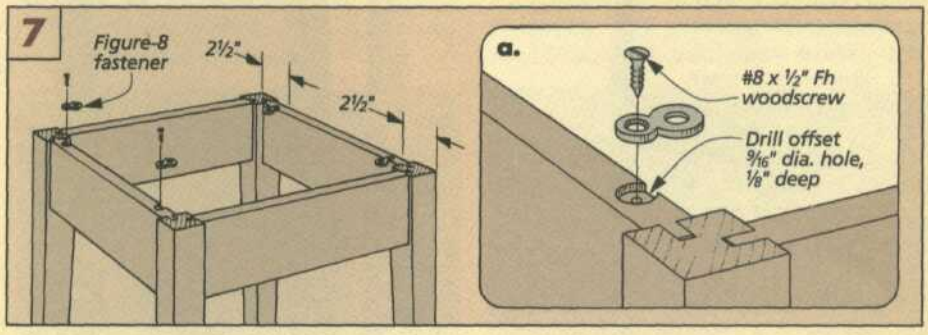

TOP

To complete the table, all that's left is to build the top (C). The top of this table is a **glued-up** panel that's cut 16" square, see Fig. 8. Once it was cut to size, I relieved the edges by routing a 1/16" chamfer around the top and bottom, see Fig. 8a.

The top should be centered on the base. An easy way to do this is to first mark **centerlines** on the outside of the aprons (B) and the bottom face of the top (C), see Fig. 9. Next, lay the top face down and set the base on it so the grain on the top runs **perpendicular** with the aprons that have the figure-8 fasteners. **Then** line up **the centerlines** and screw the two together.

Note: If you're planning to paint the base of this lamp table, like I did, remove the top from the base before you begin. ❑

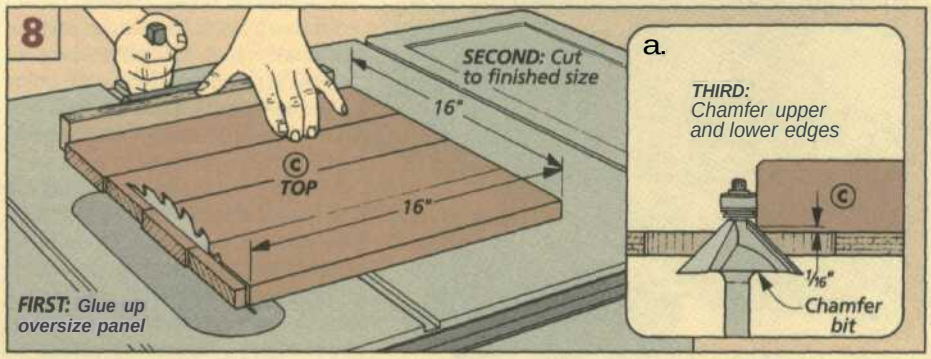

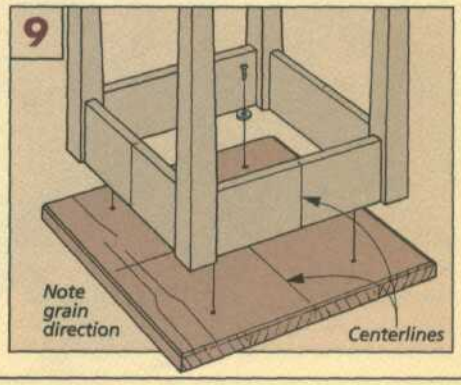

Spray Painted Finish

To create a smooth finish, you need to choose the right aerosol paint and prepare the surface carefully.

To get a smooth painted finish, you might think you'd need expensive equipment. Not so. To paint the base of the lamp table on page 18, all I used was spray paint — the kind that comes in a can. Just shake, point, and paint.

Well, it's not quite *that* easy. But two things will make your job much easier and give you the best results: choosing the right paint and preparing the surface carefully.

PAINT SELECTION. There are two types of spray paint you'll find at your local hardware store: enamel and lacquer. Both are sprayed on the same way. The big difference is how soon you can apply the second coat.

ENAMEL. Enamel paints dry slowly. So when you're applying the second coat, the first coat has to be either slightly tacky or completely dry. Usually, the directions recommend that you recoat within an hour or after a couple of days. This makes the paint a little inconvenient to work with.

Besides the slow drying quality of enamels, I've also run into problems with the second coat adhering to the first. The second coat often wrinkled and cracked like the skin of an alligator — even when I was within the "window" of time that was recommended on the can.

LACQUER. On the other hand, I've found lacquer-based spray paint quite easy to use. Lacquer paint dries quickly. It dries to the touch in 12 minutes and can be handled after an hour. But the directions say you can recoat it at any time. And the solvent in the paint softens the coat below it, so the two coats "melt" together. I haven't run into any wrinkling problems with lacquer.

To be fair, I should mention that enamel is probably tougher than lacquer. If you're planning to paint a project that will have to put up with plenty of abuse, like outdoor furniture, you'll probably want to use enamel paint instead of lacquer. But for a furniture project, like the lamp table on page 18, lacquer provides plenty of protection. And it's much easier to work with.

Safety Note: A word of caution when using spray paints. Whether you use enamel or lacquer-based paint, make sure there's plenty of good ventilation. To minimize the overspray, you can create a temporary backdrop by hanging a sheet of plastic from the ceiling. But most of all, protect your lungs by wearing a respirator.

SURFACE PREPARATION. Choosing the paint is only the first step of the process. You also have to prepare the surface carefully.

Paint only looks as good as the surface that it covers. It doesn't hide scratches or dents. Instead, it accentuates them. Unlike the texture and color of wood (which help to hide scratches), the single color of paint on a flat, smooth surface causes any blemishes to really stand out.

So don't get fooled into thinking paint will hide sloppy workmanship. You can't bypass careful sanding and rely on the paint to make everything disappear. In fact, you'll probably need to prepare the surface better than you normally would.

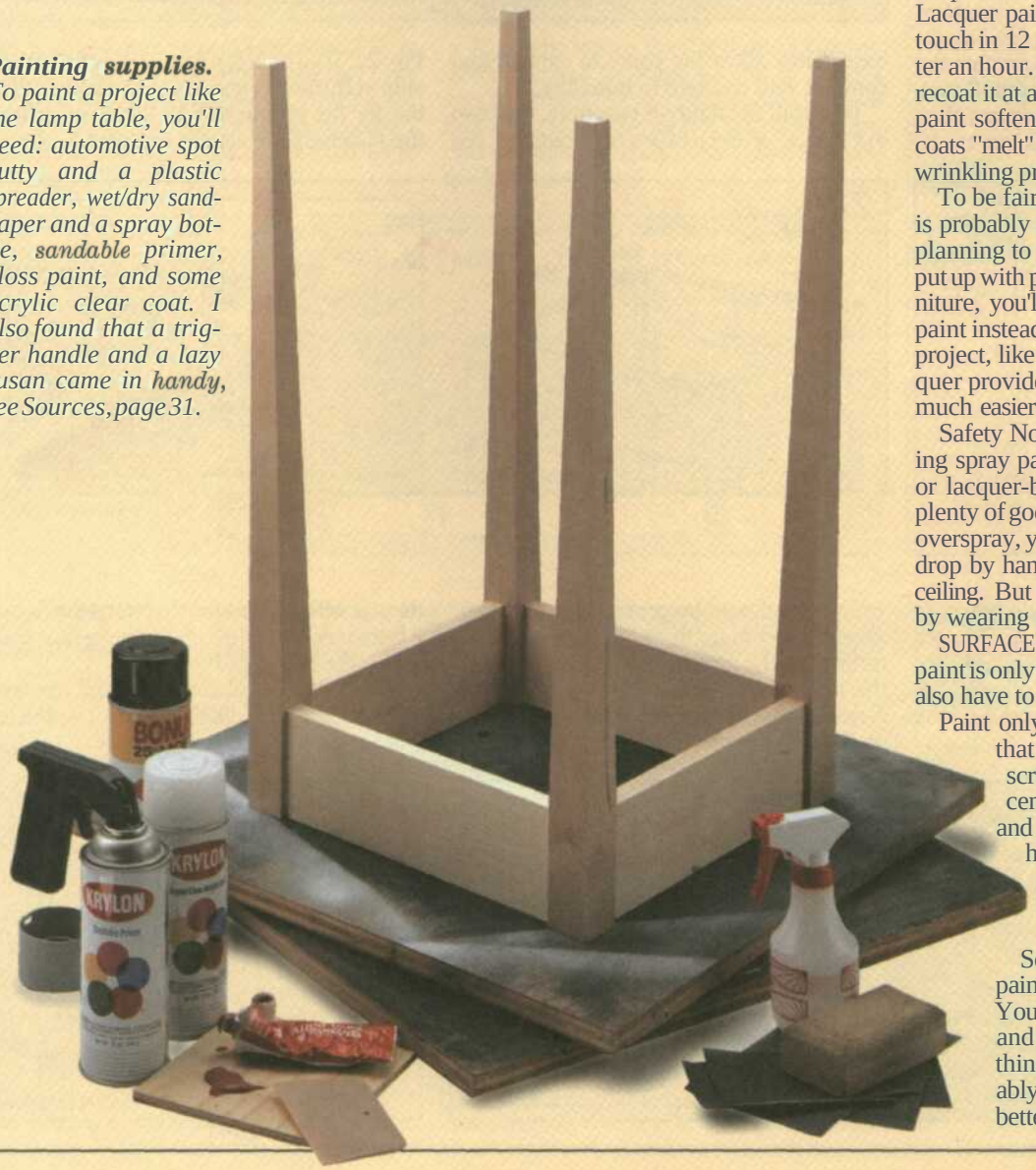

Painting supplies. *To paint a project like the lamp table, you'll need: automotive spot putty and a plastic spreader, wet/dry sandpaper and a spray bottle, sandable primer, gloss paint, and some acrylic clear coat. I also found that a trigger handle and a lazy susan came in handy, see Sources, page 31.*

STEP-BY-STEP

The secret to getting a smooth finish is having a smooth surface to apply the paint to. So before you shake up that can of paint, you have to spend some time preparing the surface. This means you need to sand, fill, and prime the wood thoroughly.

SAND & FILL. Start by sanding out the scratches and filling in dents and chipout, see Step 1. I use an automotive glazing & spot putty (made by Bondo). This putty will adhere to wood and won't shrink.

PRIME. When the wood has been filled, sanded smooth, and wiped clean, it's ready for primer, see Step 2. The primer provides a base for the paint. Note: I used a sandable primer, and to make sure the primer and paint were compatible, I used the same brand for both.

FILL. With the primer on, you'll be able to see any scratches you might have missed. And you may find the areas you filled earlier are a little rough. So fill these areas again before going on, see Step 3.

SAND. The next step is to sand again, see Step 4. But the primer "loads up" regular sandpaper quickly. So from now on when sanding, mist the project with a water bottle and sand everything with wet/dry paper.

PRIME. With the base sanded smooth, I primed it again, see Step 5. I had cut through the primer to the wood in some places, and I also wanted to make sure the dents and scratches had been filled completely.

Repeat this process of filling, sanding, and priming until the surface is smooth. Then lightly sand one more time with 400-grit wet/dry paper to get it really smooth.

PAINT. To paint the base of the lamp table, I sprayed on four coats of gloss lacquer paint, see Step 6. There's nothing magic about this number; I just wanted to be sure the surface was covered well.

Next, I "rubbed out" the base one last time with 400-grit sandpaper, see Step 7. Again you want to use a light touch. When sanding the paint, the sandpaper can easily cut through to the primer — or to the wood. Note: The paint will dull as you sand it. That's okay. The gloss will return when the clear coat is applied next.

CLEAR COAT. The last step is to spray on several coats of an acrylic clear coat, see Step 8. This adds extra protection to the finish and gives it more depth. Also, the clear coat determines the final gloss of the finish. So if you want a high-gloss finish, use a gloss clear coat. But if you'd like to tone down the gloss, like I did on the lamp table, choose a satin clear coat.

I decided not to sand or rub out the clear coat at all. The reason for this is simple. When sanding it's too easy to sand through the paint (and even the primer) at the corners. So what you could end up with is a lot of extra work. ❑

1 *A painted finish requires a smooth surface. Begin by sanding to 180-grit and filling any dents and deep scratches with automotive glazing & spot putty.*

2 *Next, spray on a coat of sandable primer in short, sweeping passes. The goal is an even, wet coat. But to avoid runs and sags, keep the first coat light.*

3 *The primer will cause any missed scratches to stand out. And the dents filled earlier may not be perfectly smooth. So apply putty to these areas.*

4 *When the putty is completely dry, the primer and putty need to be sanded. To do this, mist water on the project and sand it with 220-grit wet/dry sandpaper.*

5 *After sanding, apply another coat of primer. And if necessary, repeat Steps 3-5. When all the blemishes are gone, sand very lightly with 400-grit wet/dry paper.*

6 *Now that the surface is smooth, the project is ready for paint. I applied four coats of a gloss paint, spraying it on with the same technique as the primer.*

7 *When the last coat of paint is dry, any dust particles and paint "sputters" need to be removed. So very lightly rub out the paint with 400-grit wet/dry sandpaper.*

8 *To add depth and protection to the finish, the last step is to apply an acrylic clear coat. Again, I sprayed on four coats. But this time, I used satin instead of gloss.*

Serving Tray

This tray served up a couple interesting challenges: shaping the sculpted handles on the ends, and creating a smooth lip around the inside edge of the tray.

Small projects, like this serving tray, can be just as rewarding as larger ones. The scale may not be quite the same, but there are still plenty of challenges to work out — especially when you're trying to come up with a procedure that works well and makes the building process as simple as possible.

HANDLES. One challenge on this tray was shaping the handles. I didn't want to just glue them to the end pieces; the joint line would have been too distracting. So these handles had to be sculpted from the same block of wood that the ends are cut from. But looking at the block and "seeing" the handles (like a sculptor would), I realized that a lot of cutting and routing had to be done on some fairly narrow pieces.

The solution? Instead of working with two separate blanks (one for each end piece), I started out with only one wide blank. This way, both handles could be shaped safely. Then later, they could be cut to finished size from the blank.

ROUTED COVE. This tray provided another little challenge: the routed cove along the inside edge. I wanted the cove to end up perfectly flush with the plywood panel. This not only looks better; it's also easier to keep clean. But which do you establish first — the position of the cove or the panel?

I began by routing the cove. Then I could sneak up on the location of the panel by using my table saw and a few test pieces. I did it this way because the fence on my table saw lets me "fine tune" a cut better than the fence on my router table.

TRAY ENDS

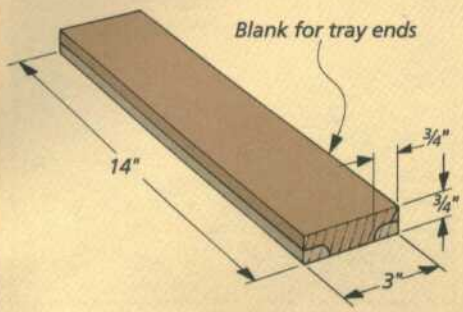

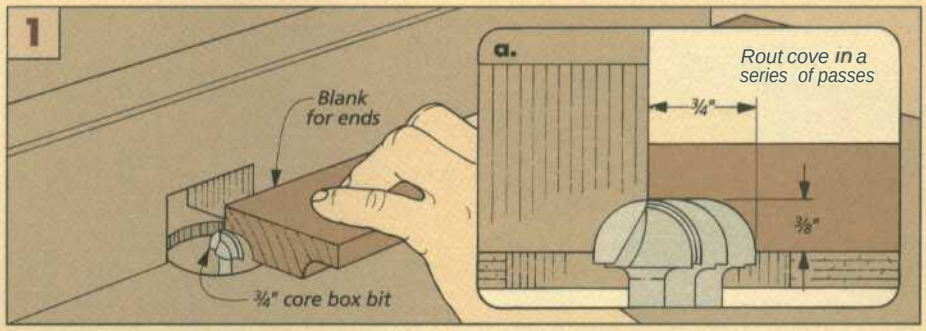

I started work on the serving tray by cutting out and shaping the end pieces, which also serve as the handles.

Actually, these two end pieces start out as one wide blank, see drawing above. This makes these pieces much easier and safer to hold when you're routing them.

The first thing that needs to be done with the blank is to create a cove along the bottom edge of each side, see Fig. 1. This will form the bottom edge of the handles.

To rout the cove, I used a router table with a ¾" core box bit raised ⅜" above the table. Set the router fence so the cut is ⅜" wide. Then make a pass along both edges, see Fig. la. Then to increase the width of the cove, move the router fence slightly away from the bit and make a couple more passes. Repeat this procedure until the cove is a full ¾" wide. Then sand it smooth, see the first tip in the box below.

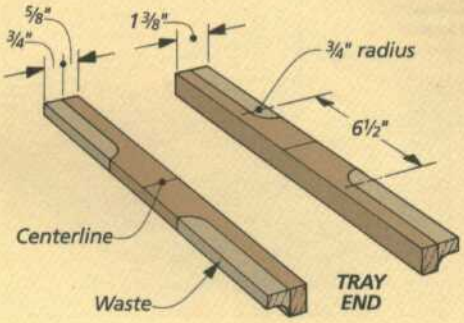

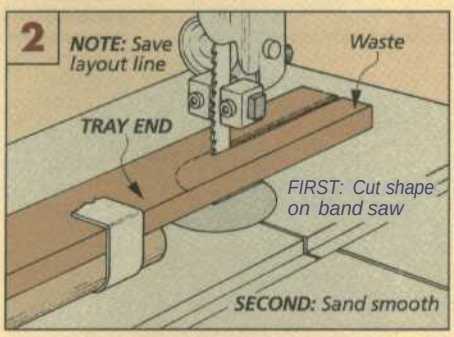

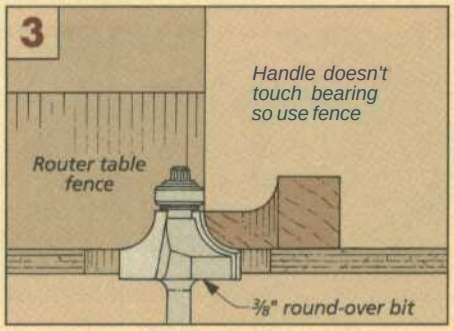

The next step is to cut the end pieces to width and complete the handles.

With the cove routed, now you can cut the end pieces to final width from the blank. To do this, set the fence 1⅜" from the blade and rip one end piece from the blank. Then flip the blank around and rip the other piece.

Now lay out the shape of the handle on both pieces, see drawing above and the second tip in the box below. Then this shape can be cut out with a band saw, see Fig. 2

The only problem here is the piece can rock when making the cut. So I used a dowel to add stability, see the third tip in the box below. Don't try to cut right to the line with the band saw; it works better to sand up to it instead. (I used a drum sander.)

Now to complete the handle, rout a ⅜" roundover along the top edge, see Fig. 3. But the handle is too thin to ride against the bearing, so you'll need to use the fence.

BUILDING TIPS

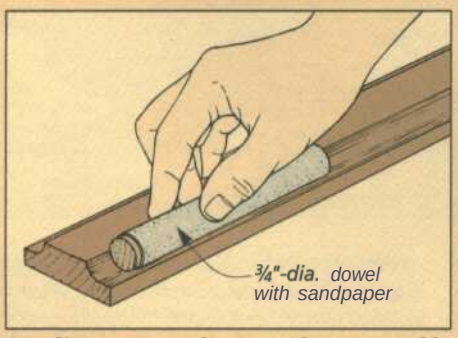

Sanding. *To sand a routed cove quickly and consistently, I wrap adhesive-backed sandpaper around a dowel.*

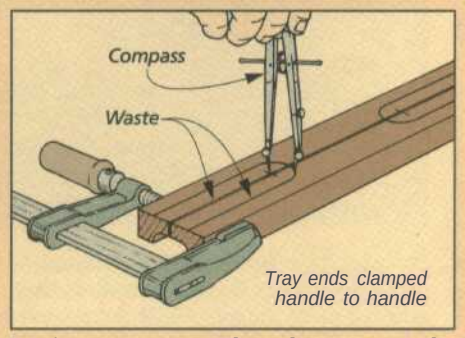

Laying out arcs. *When laying out the arcs, I found it easiest to clamp the opposing sides together and use a compass.*

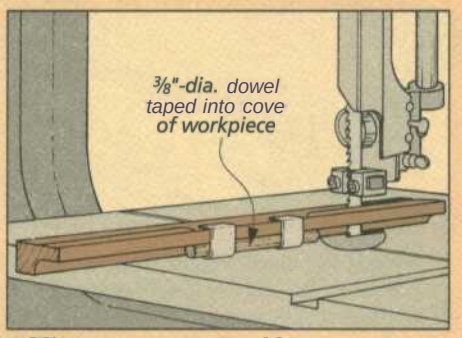

Adding support. *To add support to a small workpiece with a routed cove, I used tape to hold a dowel in the cove.*

SIDES & FEET

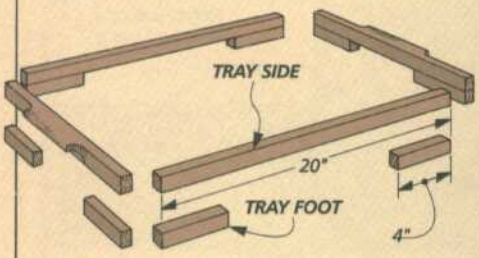

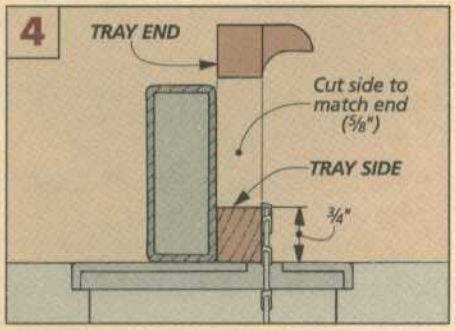

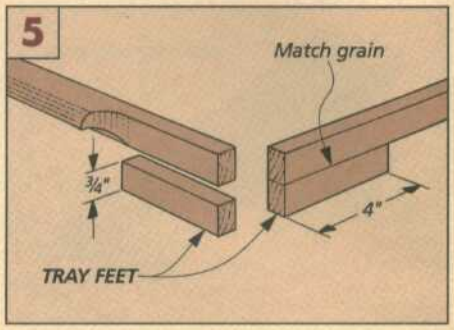

With the handles complete, it's time to make the sides and add some feet.

Creating the two 20"-long side pieces is simply a matter of ripping them to match the final width of the end pieces, see Fig. 4 and the drawing above.

The next step is to make feet for both the side and end pieces, see Fig. 5. Cutting them to size is as easy as cutting the side pieces. In fact, the fence setting is the same. Just start with extra long blanks, and when they've been ripped to width, you can cut the blanks to make eight 4"-long feet.

With the feet cut to size, they're ready to be glued and clamped to the sides and ends. When gluing the feet, they should be flush with the ends and with the outside face of each piece. And pay attention to the wood grain too. It's best if the feet "blend" into the side and end pieces as much as possible so the joint line isn't noticeable.

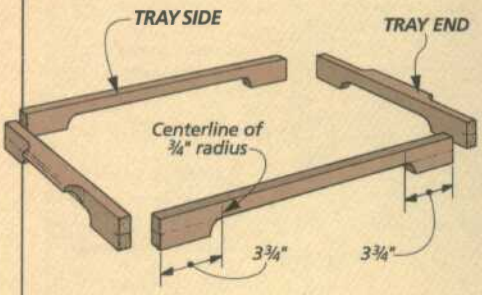

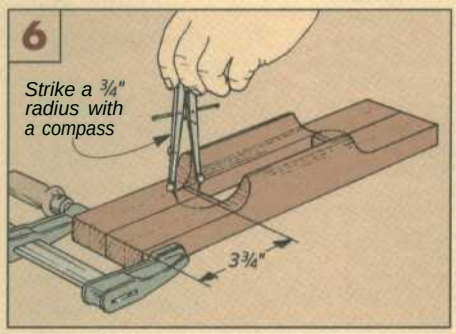

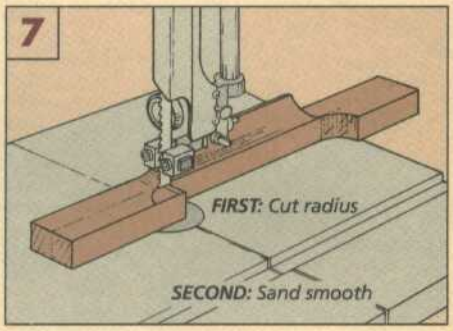

***I* didn't really want square feet for the tray, so I cut a small curve on the inside edge of each.**

The first step for creating a curve is striking an arc. The arcs have a 3/4" radius and are centered 3 3/4" away from the ends of the pieces. But setting a compass exactly on the edge is a bit of a balancing act. To make this easier, I clamped the opposing pieces together to draw the arcs, see Fig. 6.

When the arcs are all laid out, cut the curve for each foot, see Fig. 7. (Again, to do this, I used a band saw to remove the waste. And then I sanded the curves smooth with a drum sander.)

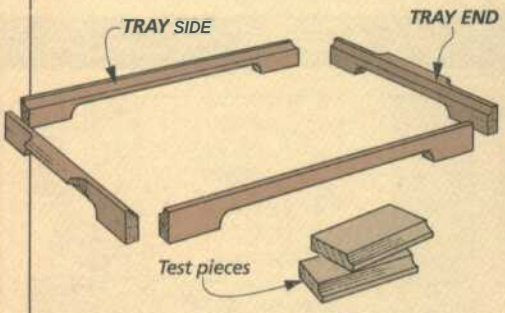

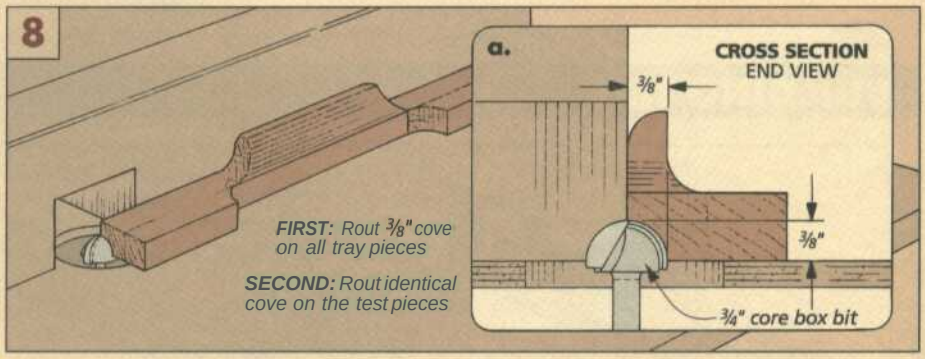

Next, **I created a lip around the tray by routing a 3/8" cove along the inside edge of the tray pieces.**

To do this, I used the router table with a 3/4" core box bit, see Fig. 8. Simply raise the bit 3/8" above the table and then set the fence to make a 3/8"-wide cut, see Fig. 8a. Now, you can rout the cove on each tray piece.

After the cove has been routed, there's still one more thing to do. And that's to rout a few test pieces with the same cove, see drawing above left. These test pieces will help later when you need to position a groove that will be cut in the tray pieces.

To make the test pieces, first cut a few blanks from scraps. The blanks don't need to match the size or shape of the end pieces, but you do want them big enough to work with safely. (Later, you'll be ripping a groove on the table saw.) Then simply rout the cove along one edge of each blank.

PANEL & ASSEMBLY

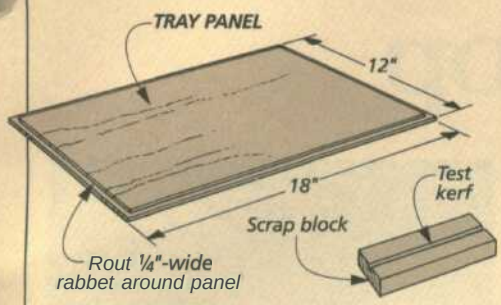

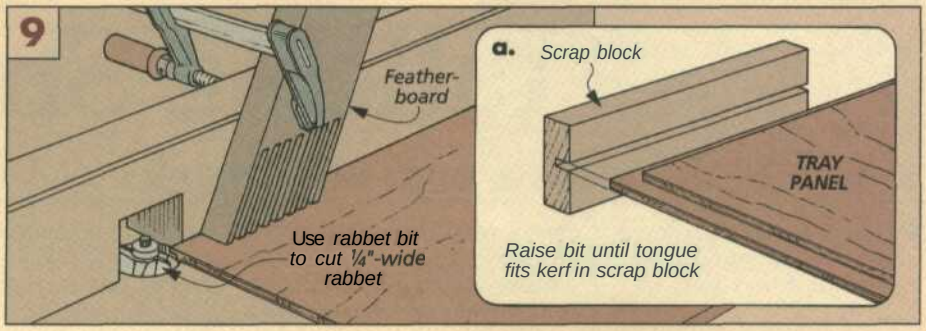

The next step is to make the plywood panel for the tray.

To make this panel, first cut a piece of ¼"-thick plywood to finished size, see the drawing above. (I used maple plywood and cut it 12" wide and 18" long.)

The panel fits into a groove that will be cut later in the side and end pieces, see the next series of steps below. But since saw blades can vary in thickness, it's a good idea to cut a test kerf in a scrap block, see drawing. Then you can cut the tongue on the plywood panel to fit your saw blade's kerf exactly.

To create the ¼"-wide tongue on the plywood panel, I used a rabbet bit in the router table, see Fig. 9. I snuck up on the final thickness of the tongue until it fit the kerf in the scrap block, see Fig. 9a.

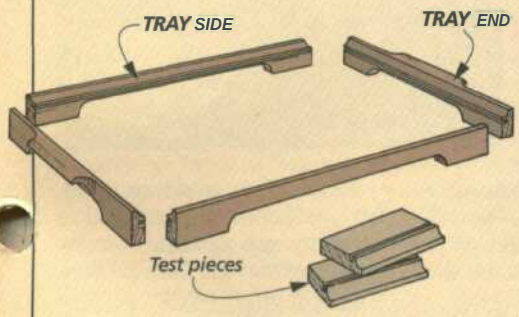

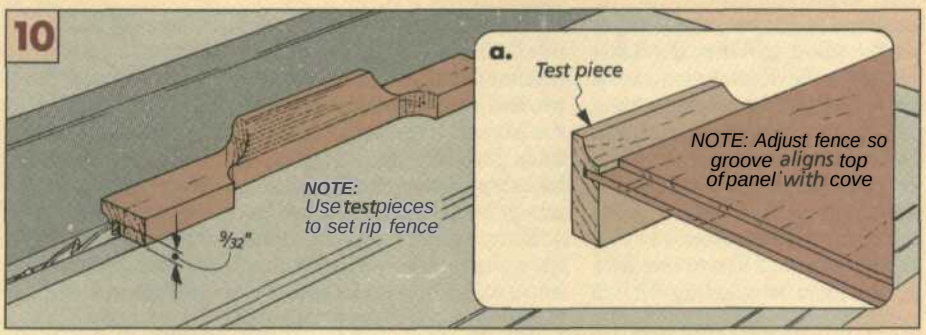

Now if s time to cut a groove in the side and end pieces to accept the panel.

The idea is to locate the groove so the top of the panel is flush with the bottom of the cove, see Fig. 10a. And to set up the cut, you'll use the test pieces you made earlier.

Start by raising the saw blade to match the length of the tongue on the panel. (Actually, I cut the groove 1/32" deeper so the tongue wouldn't bottom out.) Then set the rip fence ½" from the blade and cut a groove in one of the test pieces. Now test the fit with the panel, see Fig. lOa. If the panel sticks above the cove, move the fence away from the blade. Otherwise, move it closer.

Now when you have the rip fence positioned correctly, cut the grooves on all the tray pieces, see Fig. 10.

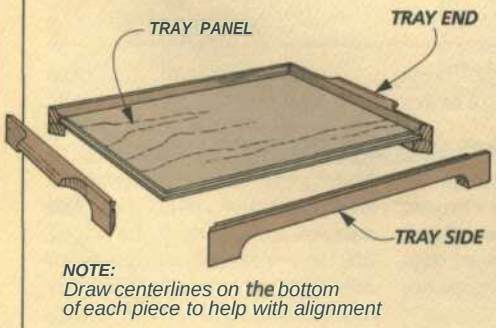

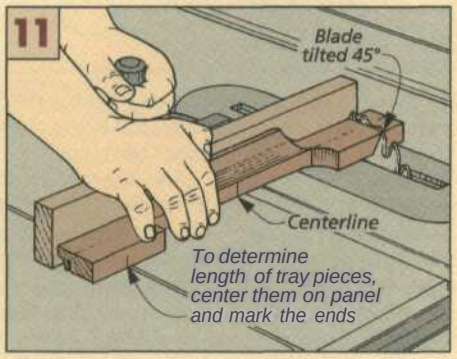

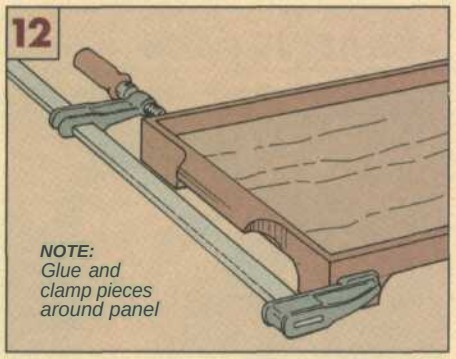

The last step is to miter the ends of the tray pieces before assembling the tray.

Normally, when I'm mitering pieces with a table saw, I use the miter gauge set to the proper angle. But for this tray, I tilted the blade 45° instead, see Fig. 11. This way, all the pieces can be laid face down, and the handles on the ends don't get in the way.

There's another thing that's different. To cut the tray pieces to length, you need to mark them off the panel so they're perfectly centered. To do this, I drew centerlines on the bottom of the plywood panel and the tray pieces. Then dry assemble each piece around the panel, centerline to centerline, and mark where each piece should be cut.

After the tray pieces are mitered, you can glue them around the plywood panel, see Fig. 12. Finally, to protect the serving tray in case of spills, I applied a couple of coats of a satin polyurethane. ❑

Talking Shop

FRICTION REDUCERS & RUST INHIBITORS

• Most woodworkers know that high humidity causes wood to expand. But here in Iowa, the high humidity during the summer creates other problems too: friction and rust. This friction makes a workpiece stick to a metal table instead of sliding smoothly — the same way your shirt sticks to your back.

I've used a lot of products to reduce friction. Car wax, talcum powder, corn starch, and furniture wax to name a few. But the problem is, they leave a residue on the wood, and they don't last all that long. Plus they do very little, if anything, to protect the surface of the metal from rust. So we use three different products in our shop: *Kity Speed*, *TopCote*, and *Boeshield T-9*. (See page 31 for sources.)

KITY SPEED. I like to use *Kity Speed* for a long-lasting friction reducer. It gets a lot of use on the table saw, band saw, and drill press tables.

Part of the reason why it wears so well is what it's made from. *Kity Speed* is a special graphite wax with the consistency of tooth paste.

Mixed in with the wax are small silver flecks. These flecks are a molybdenum compound used for reducing friction. (At least that's what Farris Machinery Inc., the supplier, told me.)

The other thing I like about *Kity Speed* is how it's applied. It reminds me of waxing my car. You wipe it on. Let it haze over. Then buffit off.

This process takes a little time and effort. But it's satisfying to look back and see the silver flecks where I've put down a coat of protection.

TOPCOTE. Another product I use in the shop to help eliminate friction is *TopCote*. This is a product with a Teflon based formula that you spray on your tools. It reminds me of a vegetable shortening you spray in a pan to keep food from sticking.

Since *TopCote* is an aerosol, it's a convenient way of getting into a difficult-to-reach area. For instance, I use it on the planer bed because the spray easily covers the whole surface, and I don't have to worry about missing a spot. I also use it on some of my hand tools (like my combination square) to prevent rust. It easily gets into all those nooks and crannies.

To use *TopCote*, simply spray it on and let it dry for a few seconds. Then for the best results, just rub it out lightly with a clean cloth. Although a second coat is recommended, I've found a single application is usually enough.

TopCote is easy to apply, and I'd use it exclusively — except for a couple of things. First, it's a little more expensive than a paste product. And second, it doesn't seem to last as long once it's been applied.

Shop Caution: When spraying aerosols like *TopCote*, the thing to be careful with is the overspray. If it gets on the shop floor it can become slippery.

BOESHIELD T-9. While *Kity Speed* or *TopCote* does provide some rust protection, there's another product better suited for the job: *Boeshield T-9*. It's designed to protect metal parts from moisture. So it's ideal for those shop tools that don't get used all that often.

Boeshield is an aerosal product product that's composed of a solvent and paraffin wax. By spraying on a light film and then wiping it off, it can be used to protect and lubricate the tools you use everyday.

But to protect your tools for a long stretch (like over the summer), simply spray a coat on and let it set — don't buff it out. This does leave a sticky film. So when you're ready to use the tool, simply wipe it down with a solvent.

ABRASIVE PADS

• *You've mentioned abrasive pads in previous issues, and I've seen them in local hardware stores. Can you tell me a little about them?*

Abrasive pads (like Scotch Brite, Bear-Tex, and Scuff-Rite) work well when you are smoothing out a finish between coats. If you typically use steel wool or 320-grit (or finer) sandpaper between coats, you might want to give these pads a try. Abrasive pads have some distinct advantages.

Unlike sandpaper, these pads don't clog up with dried finish. That's because the small abrasive particles are bonded into an open web of interlocking fibers, instead of being glued to a heavy paper backing.

And there's another benefit. Abrasive pads are flexible. So they can conform to the shape of the surface, which makes moldings and curved parts of projects much easier to work on, see photo at left.

Abrasive pads also have an advantage over traditional steel wool. Steel wool leaves tiny slivers behind, which is a problem especially when you're working with water-based finishes. The slivers can rust when the next coat of finish is applied.

On the other hand, the fibers that make up the abrasive pads are synthetic. As you rub the pad across the workpiece, the fibers wear away and expose fresh abrasive particles. The surface still needs to be wiped off, but any missed particles aren't going to rust and discolor.

Abrasive pads come in a variety of "grits" and are usually color coded. But since different companies produce different abrasive pads, they're not standardized, like sandpaper and steel wool. However, there's often a steel wool equivalent in the product information.

DOG HOLES

• In the last issue, we featured a workbench complete with holes for round bench dogs. But what if you want to add dog holes to an existing bench?

I've found that whether you add holes during the building process or after the top is complete, there are two steps: laying out the holes and drilling them.

LAYOUT. To lay out the dog holes, start by determining the distance between them.

At *most*, this distance should be slightly less than the opening capacity of your vise, see Fig. 1. However, when laying out the holes on my bench top, I wanted to avoid turning the vise handle a number of times when adjusting it to hold a piece. So I usually space the holes 3"-4" apart.

Of course, you don't need a vise to use bench dogs. With the bench top I built in the last issue, I used Wonder Dogs in addition to a vise, see Fig. 1. On a Wonder Dog, the screw is much shorter than on a vise, so the dog holes can't be much any apart than 4". (The length the screw on the Wonder Dog travels.)

LOCATION. Spacing isn't the only thing you need to consider. You also have to determine the specific location of the holes. In other words, there are some objects you need to avoid.

The most obvious obstructions are the parts of the vise. Avoid drilling holes in the vise screw, guide rods, and carriage.

But there are other things that can get in the way. The base that the bench top sits on, any drawers, or even a cabinet underneath the bench are all obstructions that can prevent you from getting a bench dog seated fully in its hole — or back out if the dog is pushed in too far.

DRILLING. When the holes are laid out, the next step is to drill them. If you are building the top, this isn't a problem; you can drill the holes before the top is assembled.

But when the top is already built, it's too big to use the drill press, so you have to drill it by hand. The trick here is keeping the holes perpendicular and finding a drill bit long enough to drill all the way through the top. But there's an easy solution. You can use a hand drill guide and a spade bit to drill the holes, see photo. Note: For more on the spade bit and drill guide I've used in the past, see page 32.

When drilling the holes, you want to prevent the bit from "blowing out" the bottom side. To do this, I set the depth of the guide so just the tip of the bit breaks through the bottom, see Fig. 2. Then flip the bench top over and complete the holes by drilling from the opposite side.

To complete the dog holes, I also rout an 1/8" chamfer around the top and bottom edges.

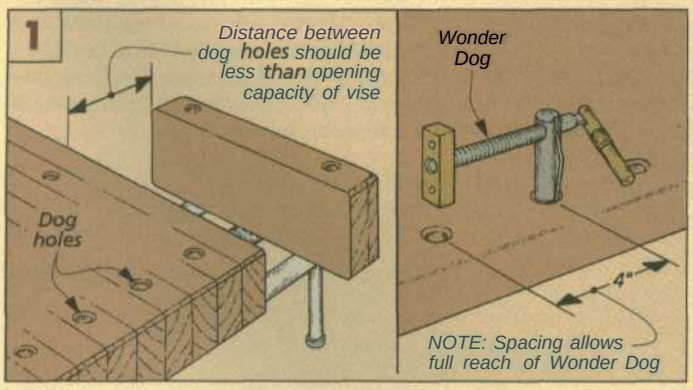

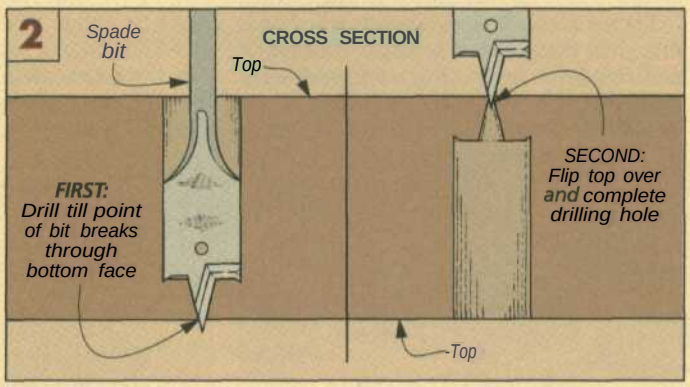

HORSEPOWER RATINGS

■ *Recently, I've been looking to buy a table saw, and I've run across advertisements that say a saw "develops three horsepower." What does this mean and how can I find out how powerful a motor actually is?*

When a motor is pushed to its limit, say by cutting through a hard knot, the motor draws more amperage than under normal conditions. Just before it stalls, the motor will be drawing the most amperage and producing its maximum horsepower. The most it can develop. Of course, it will only be able to maintain this for a short period of time before the motor stalls or the circuit breaker kicks off.

This is what manufacturers mean when they say a motor "develops 3hp." (It can also be referred to as a motor's "peak horsepower.") Technically, the manufacturers are right. But in my opinion, it's misleading. They're trying to get you to compare apples to oranges.

Most table saw motors use a continuous-duty horsepower rating. This is the amount of power a saw produces under normal use — it's the power you will work with most of the time.

To compare motors, check their identification plates. You can look at the horsepower rating, but often it's left off of saws that advertise their developed horsepower. But you can still compare them by checking the amperage ratings.

Generally speaking, the higher the amperage the more power the motor produces. So if one motor develops 3hp and another is a continuous-duty 1hp motor and both draw about the same amperage, you can be pretty sure that both motors produce about the same power.

Assembly Jig

A simple locking system holds large pieces of stock without any clamps. Now you can assemble a project all by yourself.

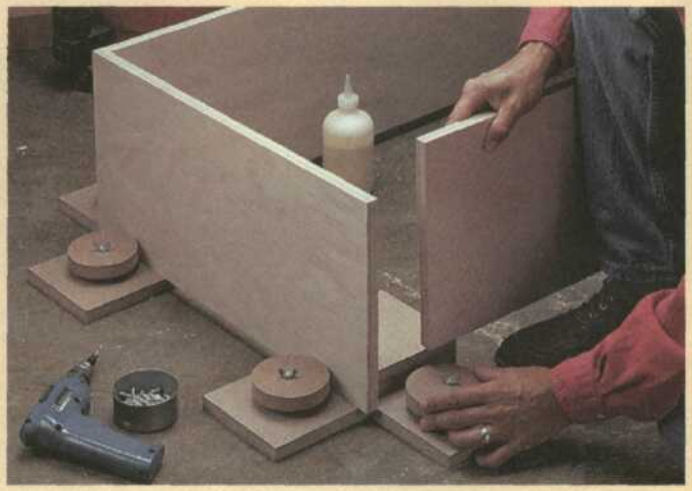

Most woodworkers could use a little help from time to time, especially when assembling big projects. For example, trying to join two pieces of plywood together can be nearly impossible unless someone is around to give you a hand.

Since I probably won't grow a "third hand," the assembly jig sent in by **Roger Balling** of Santa Ana, California, is a welcome addition to the shop. It can be used to keep your ¾"-thick workpieces aligned until your bar clamps are in position. Or if you make four of them, they will hold all of your large case pieces (one at each corner) so you can nail or screw them together.

This jig is so simple to make, you can almost build a set of four as easily as building one. That's because it consists of just a few parts. There's an L-shaped base. A thick, square block glued to one corner. And bolted to the base is a pair of circular disks.

These disks have an offset mounting hole that gives them a "cam action." So it's quick and simple to wedge the workpiece tight against the block. Just turn the disk.

BASE. Since all of the pieces of the jig are attached to the base, I started with it first.

The base consists of two 6"-wide pieces that are 12" long. Each piece has a 45° angle cut at one end, so when these base pieces are glued together, you end up with an L-shaped base, see Fig. 1.

CORNER BLOCK. Sitting on top of the base is a corner block. This is just two more 6"-square pieces glued together to form a 1½"-thick block. When glued in place, the corner block covers the mitered joint on the base to strengthen the jig.

The extra thickness of the block is like small fence that supports your workpiece when the clamping disks are tightened. The only thing critical about making the corner block is getting the corners square (90°). If they're not, the corners on your project won't be either. Once it's glued up, simply glue and clamp it to the base.

DISKS & SPACERS. Also attached to the base are two 4" disks. They are the heart of the jig. They wedge your workpieces tight against the corner block to hold them tight for assembly. For this to work, the mounting hole in each disk isn't drilled in the center. It's offset by ¼", see Fig. 2. That way, the harder you twist a disk, the tighter it wedges the workpiece.

Mounted under each disk is a W hardboard (Masonite) spacer, see Figs. la and 2. It raises the disk up off the base to make it easier to grip. Unlike the disk, the mounting hole for the spacer is centered. Both the spacer and disk are attached to the base with a carriage bolt and a wing nut. Don't overtighten the wing nut. It should be snug yet allow the disk to turn freely.

USING THE JIG. Once the spacers and disks are attached, the jig is ready to use.

Simply set your pieces in the jig against the corner block and twist the disks to hold them in place, see Fig. 3. ❑

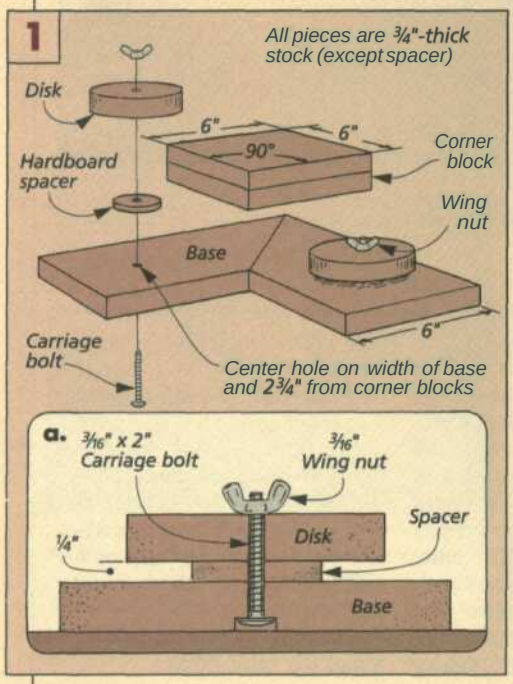

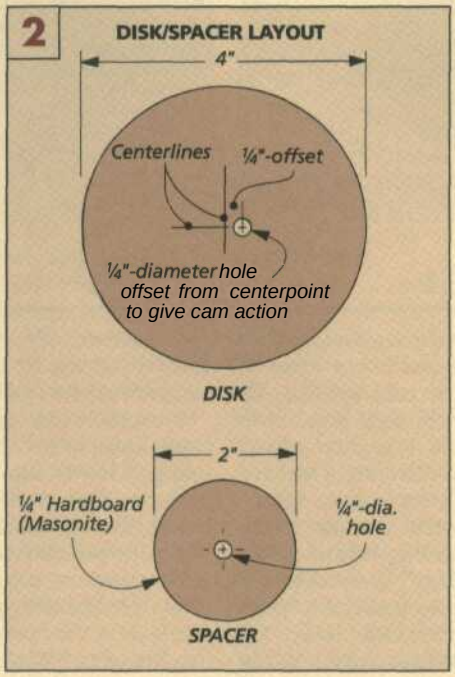

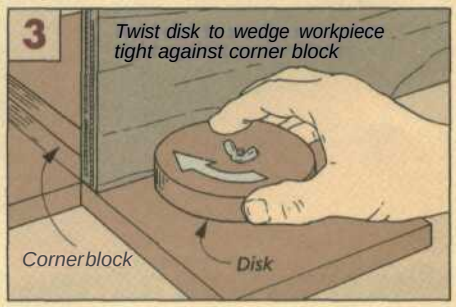

FEATURE YOUR JIG

If you've built an *original* jig and would like to see it featured on this page, send your idea to *Woodsmith*, Reader's Jig, 2200 Grand Ave., Des Moines, IA 50312.

If we publish it, we'll send you $100 and a full set of *Woodsmith* back issues, with binders. (This set retails for over $300.) Include a sketch (or photo) of your jig and explain how it's used. And *please* include a daytime phone number.

Sources

Woodsmith Project Supplies offers hardware kits and supplies for some of the projects shown in this issue. Supplies for these projects are also available at your local hardware store or through one of the mail order catalogs listed below.

WALNUT CABINET

A complete hardware kit for the walnut cabinet, shown on page 6, is currently available. This kit includes all the woodscrews you will need, plus the following:

- (2 pair) 2½"-long Brass Ball-tipped Hinges
- (2) Brass Ball Catches
- (2) 1" Brass Knobs
- (4) Brass Spoon-style Shelf Supports

W101-7101-100 Walnut Cabinet Hardware Kit.....$39.95

This or similar hardware is also available from the woodworking catalogs listed in the mail order sources below.

FINISH. To finish the cabinet, I wiped on two coats of General Finishes' *Royal Finish*, (a wipe-on oil/urethane finish). *Woodsmith Project Supplies* is currently offering this finish.

W101-4003-602 Royal Finish (Satin).....$11.95 quart

General Finishes and other oil finishes are also available at local hardware stores or through the mail order sources below.

LAMP TABLE

To build the lamp table on page 18, the only hardware you'll need are four figure-8 fasteners and eight #8 x ½" flathead woodscrews. This hardware may be available at your local hardware store. Or you can order it from the catalogs listed below.

PAINTED FINISH

To finish the top of the lamp table, I applied a couple coats of General Finishes' *Royal Finish*, see above. But the base of the table was spray painted.

SANDING **SUPPLIES.** To apply a painted finish, you need some automotive glazing, spot putty (I used *Bondo*), and a plastic applicator (which can simply be an old credit card). Also, you'll need some wet/dry sandpaper (220-grit and 400-grit) and a spray bottle.

PAINTING SUPPLIES. For the primer and paint, I used *Krylon's* lacquer-based paint, available at local hardware stores. (Note: If the can doesn't say if it's lacquer-based, check the directions. You can recoat lacquer-based paint immediately.) The only other thing you'll need is an acrylic clear coat. I used a satin clear coat, that's also made by Krylon.

Besides the supplies listed, there are a few additional items you'll find helpful.

SAFETY ITEMS. When spray painting, you'll want to use a respirator, see the catalogs below for sources. And to provide a backdrop to catch the overspray, hang a sheet of plastic behind the project.

SPRAY HANDLE. Another item I found at the hardware store was a handle with a trigger that attaches to the spray can, see the photo on page 22. This attachment costs about $2, and it allows you to spray the paint without getting finger cramps.

LAZY SUSAN. And finally, you might want to invest in a lazy susan turntable, see page 22. All that's needed are two pieces of plywood and a lazy susan swivel. I've seen the swivel at local hardware stores, or you can order one from the catalogs listed below. It sure beats walking circles around a project.

TALKING SHOP

DRY LUBRICANTS. You probably won't be able to find *Kity Speed*, *TopCote*, or *Boeshield T-9* at a local hardware store (see page 28). But they're available from the catalogs below.

ABRASIVE PADS. The abrasive pads, mentioned on page 28, are becoming more common. If you can't find them at a hardware store, you can order them from the catalogs listed below.

HAND DRILL GUIDE. I've used a hand drill guide in the past. In fact, we've had one in our shop for years. But in order to use it, the chuck has to be removed from the drill. (Unless you can "dedicate" an extra drill to stay with the guide.)

Recently, I ran across a drill guide, made by General, that's a definite improvement over the older one. Ifs similar to the old one. But it includes a chuck, so you don't have to take your drill apart. Simply mount the bit into the chuck and then mount your drill to the guide.

Another nice feature allows you to drill angled holes easily. There's a "built-in" scale, so you don't have to guess at the angle. Also, two plastic knobs make it easy to lock and unlock the base.

SPURRED SPADE **BITS.** When drilling holes through a thick bench top, I use a spade bit. But not just any spade bit. I use a bit with two small spurs located at the outer edges. To produce a cleaner cut, these spurs score the perimeter of the hole. For sources, check your local hardware store or see below.

HOW TO ORDER

To order a project kit from *Woodsmith Project Supplies*, use our Toll-Free order line. It's open Monday through Friday, from 7 AM to 7 PM Central Time.

Before calling, please have your VISA, MasterCard, or Discover Card ready.

If you would like to mail an order in, call the number below for more information on shipping charges and any applicable sales tax.

1-800-444-7527

Note: Prices subject to change after December, 1995

MAIL ORDER SOURCES

Similar hardware and supplies may be found in the following catalogs. Please call each company for a catalog or information.

Garrett Wade
800–221–2942
Oil finishes, Respirators, TopCote, Abrasive pads, Drill guide

Constantine's
800–223–8087
Oil finishes, Figure-8 fasteners, Respirators, Lazy susan, TopCote, Abrasive pads, Drill guide

Woodworker's Supply
800–645–9292
Cabinet hardware, Oil finishes, Figure-8 fasteners, Respirators, Lazy susan, TopCote, Boeshield T-9, Abrasive pads, Drill guide, Spade bits

Woodcraft
800–225–1153
Cabinet hardware, Oil finishes, Respirators, Lazy susan, Abrasive pads, Drill guide, Spade bits

Woodworker's Hardware
800–383–0130
Figure-8 fasteners, Respirators, Lazy susan, TopCote, Abrasive pads

The Woodworkers' Store
800–279–4441
Cabinet hardware, Oil finishes, Figure-8 fasteners, Lazy susan, Kity Speed, TopCote, Abrasive pads

WoodNet
COMPUTER BULLETIN BOARD FOR WOODWORKERS

- Project Plans to Download
- Woodworking Techniques Forum
- Finishing Techniques Forum
- Back Issue Indexes for *Woodsmith & ShopNotes*
- For PC and Mac
- FREE First Month

To log on to WoodNet, set your communication program to 8 data bits, 1 stop bit, no parity, full duplex, and ANSI terminal emulation. Then call 1-515-245-9663.

If you have any questions, give us a call: 515-282-7000 M-F 9-5 CST

Final Details

Walnut Cabinet

Lamp Table

A *With its classic, clean lines, this lamp table will fit a variety of settings. You can build the table in a weekend with our plans, beginning on page 18.*

◄ *It's the attention to details, the doors with molded stub tenon and groove joinery and the ogee-shaped feet, that give this cabinet its classic look. Step-by-step plans begin on page 6.*

Serving Tray

◄ *Looks aren't the only thing appealing about this tray. Its sculpted handles, curved feet, and lipped edge also make for some interesting woodworking. Plans begin on page 24.*